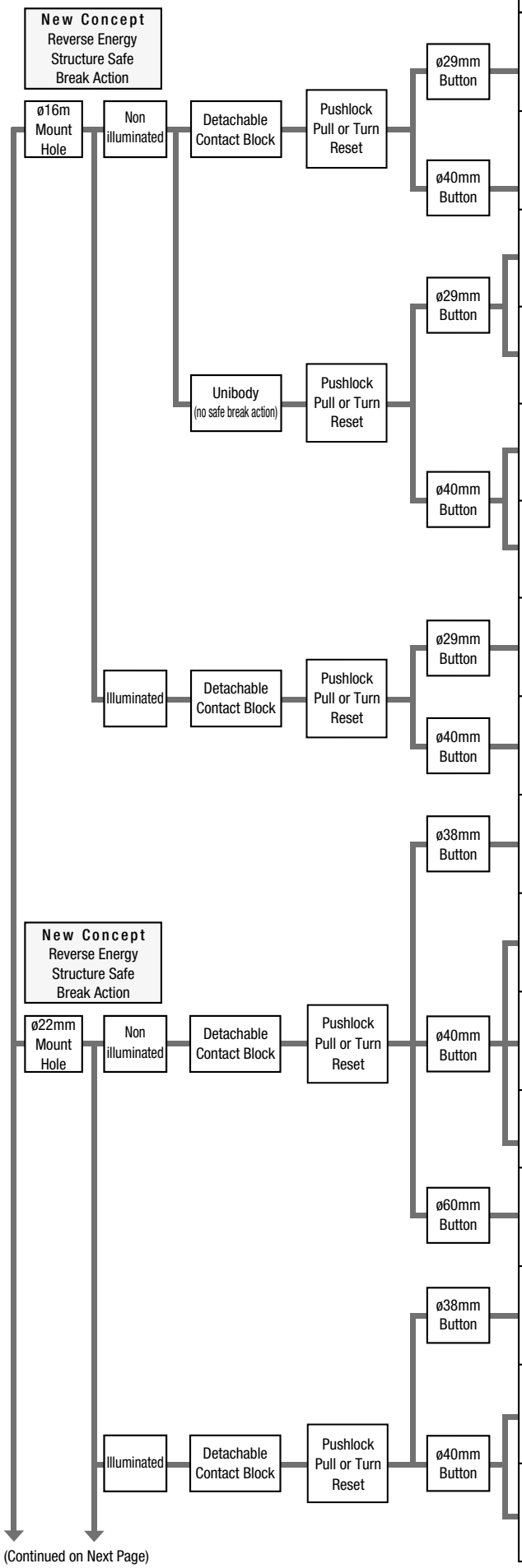

Model	Mark	Page
XA1E-BV3 (Solder, PC Board Terminal)		D-018
XA1E-BV4 (Solder, PC Board Terminal)		D-018
AB6E-3BV (Solder Terminal)		D-010
XA1E-BV3U (Solder, Solder/ Tab #110 Terminal)		D-016
AB6E-4BV (Solder Terminal)		D-010
XA1E-BV4U (Solder, Solder/ Tab #110 Terminal)		D-016
XA1E-LV3 (Solder, PC Board Terminal)		D-018
XA1E-LV4 (Solder, PC Board Terminal)		D-018
XW1E-BV4TG (Screw Terminal) Mechanical Indicator Model		D-033
XW1E-BV4 (Screw Terminal)		D-027
XW1E-BV4 (Solder, PC Board Terminal)		D-027
XW1E-BV4 (Connector)		D-027
XW1E-BV5 (Screw Terminal)		D-027
XW1E-BV4TG (Screw Terminal) Mechanical Indicator Model		D-033
XW1E-LV4 (Screw Terminal)		D-028
XW1E-LV4 (Solder, PC Board Terminal)		D-028

(Continued from previous page)

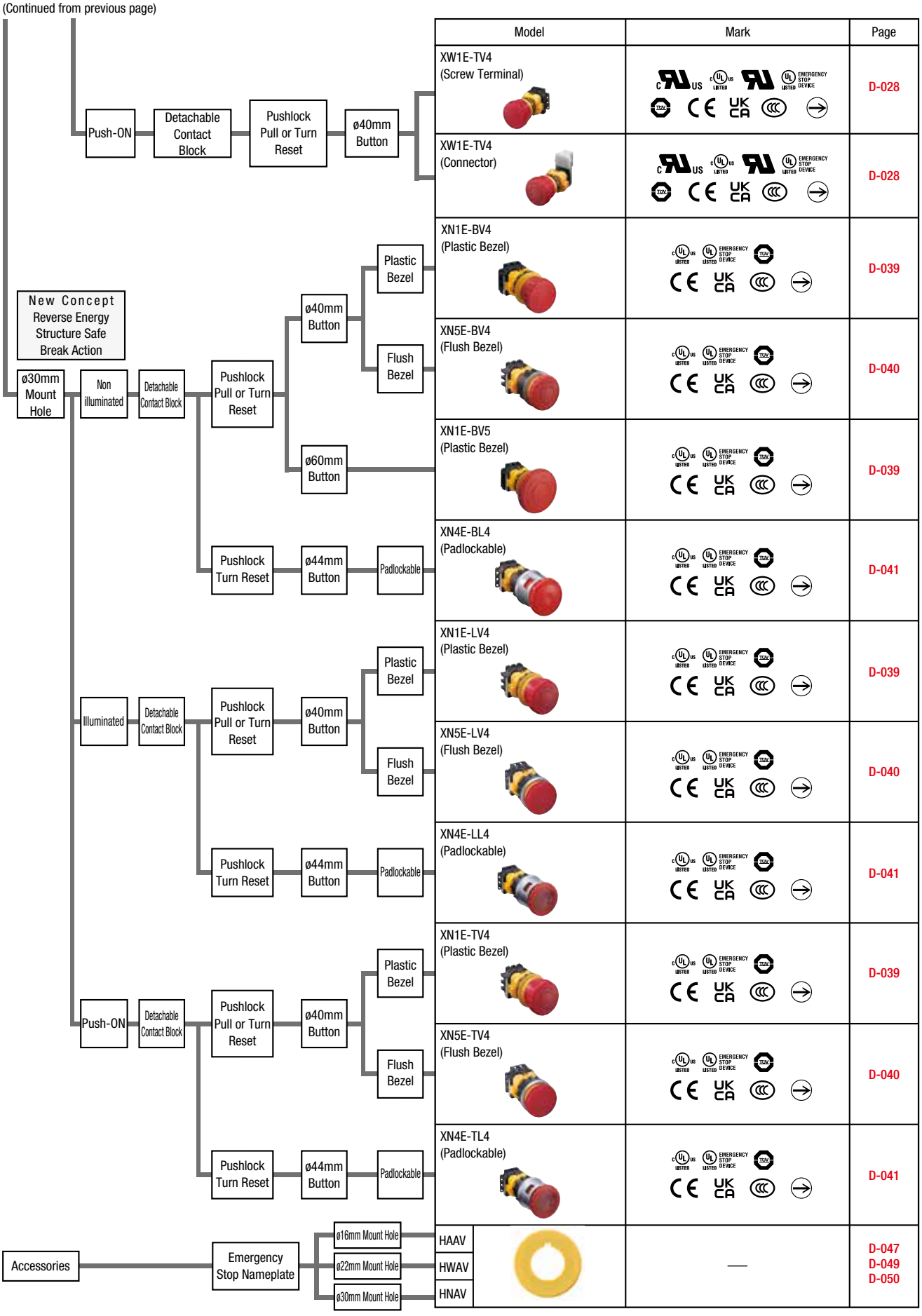

Emergency Stop Switches

X6 Series

Excellent safety and design.
The shortest depth behind the panel in its class.

• See website for details on approvals and standards.

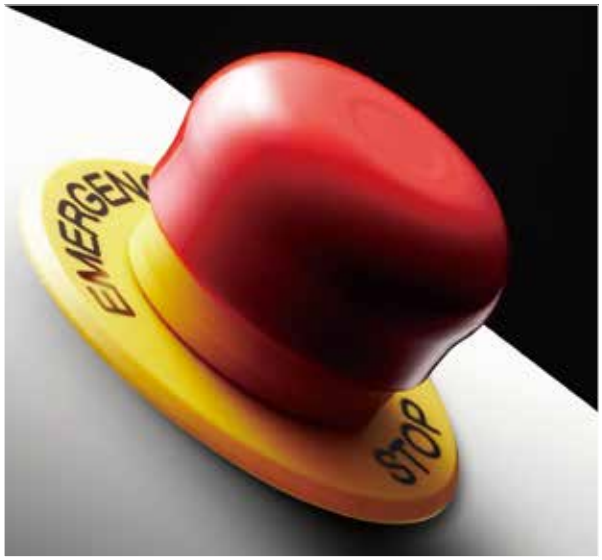

IDEC

Excellent safety

Third-generation Reverse Energy Structure

IDEC's unique Reverse Energy Structure, achieved as a result of in-depth failure analysis of emergency stop switches, has resulted in this innovative emergency stop switch.
X6 series emergency stop switches provide the highest level of safety, because the unibody design eliminates the possibility of the contact bocks falling off the switch

Unparalleled design

The smooth button is ideal for applications that require utmost cleanliness, such as food processing machines or semiconductor manufacturing equipment. Also suitable for applications requiring a sleek design of emergency stop switches, such as medical equipment.

ø30 mm Button Unmarked

ø30 mm Button Arrow Marked

ø40 mm Button Unmarked

ø40 mm Button Arrow Marked

Only 19.5 mm depth behind the panel

The short depth behind the panel reduces the required mounting space.
Depth: 30% reduction
Volume: 70% reduction
(Compared with conventional emergency stop switches)
Thus equipment and control panels can be made much smaller.

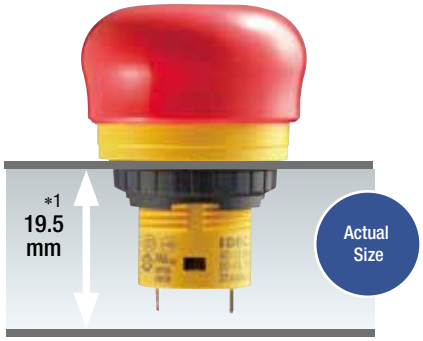

*1: Solder terminal.
Solder/tab terminal: 23.9mm

Prevents dust build-up

The smooth and ridge-less button surface prevents dust built-up, and is also easy to clean.

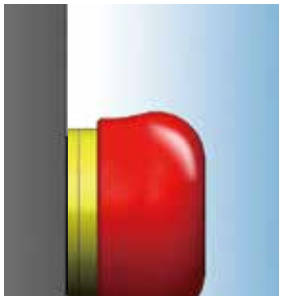
ø16mm X6 Series

Conventional Operator

Two ways to reset,two button sizes,two wiring methods.

The X6 emergency stop switch can be reset either by pulling or turning. The button is available in ø30 mm and ø40 mm sizes.
In addition to a red button, a yellow button is also available as a stop switch. Solder terminals and solder/tab terminals are available.

Two ways to reset

Pull to reset

Turn to reset

Two connection methods

Solder Terminal

Solder/Tab Terminal #110

ø16 X6 Series Emergency Stop Switches (Unibody)

Third-generation emergency stop switch with Reverse Energy Structure
Smallest in its class

- Two button sizes—ø30mm and ø40mm
- Two ways of resetting —pulling and turning.
- Safety lock mechanism (IEC 60947-5-5; 6.2)
- Direct opening action (IEC 60947-5-5; 5.2, IEC 60947-5-1, Annex K)
- Degree of protection: IP65 (IEC60529)

Standards and Specifications

Contact Ratings

Rated Insulation Voltage (Ui)				250V		
Rated Thermal Current (Ith)				5A		
Rated Operating Voltage (Ue)				30V	125V	250V
Rated Operating Current (Note)	Main Contacts	AC 50/60 Hz	Resistive Load (AC-12)	–	5A	3A
			Inductive Load (AC-15)	–	1.5A	0.75A
		DC	Resistive Load (DC-12)	2A	0.4A	0.2A
			Inductive Load (DC-13)	1A	0.22A	0.1A

- Minimum applicable load: 5V AC/DC, 1 mA (reference value)
  (May vary depending on the operating conditions and load)
- Operational current represents the classification by making and breaking currents (IEC 60947-5-1).

Note:
TÜV/CCC rating: AC-15 0.75A/250V, DC-13 1A/30V
UL rating: Standard Duty AC 0.75A/250V
Standard Duty DC 1A/30V

Specifications

Applicable Standards	IEC 60947-5-1, EN 60947-5-1 IEC 60947-5-5 (Note), EN 60947-5-5 (Note) JIS C8201-5-1, JIS C8201-5-5, UL508 CSA C22.2 No.14, GB14048.5
Operating Temperature	–25 to +60°C (no freezing)
Operating Humidity	45 to 85% RH (no condensation)
Storage Temperature	–45 to +80°C (no freezing)
Operating Force	Push to lock: 10.5N Pull to reset: 8.8N Turn to reset: 0.17 N·m
Minimum Force Required for Direct Opening Action	40N
Minimum Operator Stroke Required for Direct Opening Action	4.5 mm
Maximum Operator Stroke	4.5 mm
Contact Resistance	50 mΩ maximum (initial value)
Insulation Resistance	100 MΩ minimum (500V DC megger)
Overvoltage Category	II
Impulse Withstand Voltage	2.5 kV
Pollution Degree	3
Operation Frequency	900 operations/hour
Shock Resistance	Operation extremes: 150 m/s² Damage limits: 1000 m/s²
Vibration Resistance	Operation extremes: 10 to 500 Hz amplitude 0.35 mm, acceleration 50 m/s² Damage limits: 10 to 500 Hz, amplitude 0.35 mm, acceleration 50 m/s²
Mechanical Life	100,000 operations minimum
Electrical Life	100,000 operations minimum
Degree of Protection	IP65 (IEC 60529)
Short-circuit Protection	250V/10A fuse (Type aM IEC 60269-1/IEC 60269-2)
Conditional Short-circuit Current	1000A
Terminal Style	Solder terminal, Solder/tab terminal #110
Recommended Tightening Torque for Locking Ring	0.88 N·m
Applicable Wire Size	1.25 mm² maximum (AWG16 maximum)
Terminal Soldering Condition	310 to 350°C, within 3 seconds
Weight (approx.)	ø30mm button: 13g ø40mm button: 16g

Pushlock Pull/Turn Reset Switch (Solder Terminal)

Unmarked

Pushlock Pull/Turn Reset Switch

Package quantity: 1

Shape	Main Contact (NC)	Part No.	
		Solder Terminal	Solder/tab Terminal #110
ø30mm Mushroom	1NC	AB6E-3BV01PRH	AB6E-3BV01PTRH
	2NC	AB6E-3BV02PRH	AB6E-3BV02PTRH
ø40mm Mushroom	1NC	AB6E-4BV01PRH	AB6E-4BV01PTRH
	2NC	AB6E-4BV02PRH	AB6E-4BV02PTRH

• Pushlock pull/turn reset switches are locked when pressed, and reset when pulled or turned clockwise.

Arrow Marked

Pushlock Pull/Turn Reset Switch

Package quantity: 1

Shape	Main Contact (NC)	Part No.	
		Solder Terminal	Solder/tab Terminal #110
ø30mm Mushroom	1NC	AB6E-3BV01PRM	AB6E-3BV01PTRM
	2NC	AB6E-3BV02PRM	AB6E-3BV02PTRM
ø40mm Mushroom	1NC	AB6E-4BV01PRM	AB6E-4BV01PTRM
	2NC	AB6E-4BV02PRM	AB6E-4BV02PTRM

• Pushlock pull/turn reset switches are locked when pressed, and reset when pulled or turned clockwise.

ø16 X6 Series Emergency Stop Switches (Unibody)

Dimensions

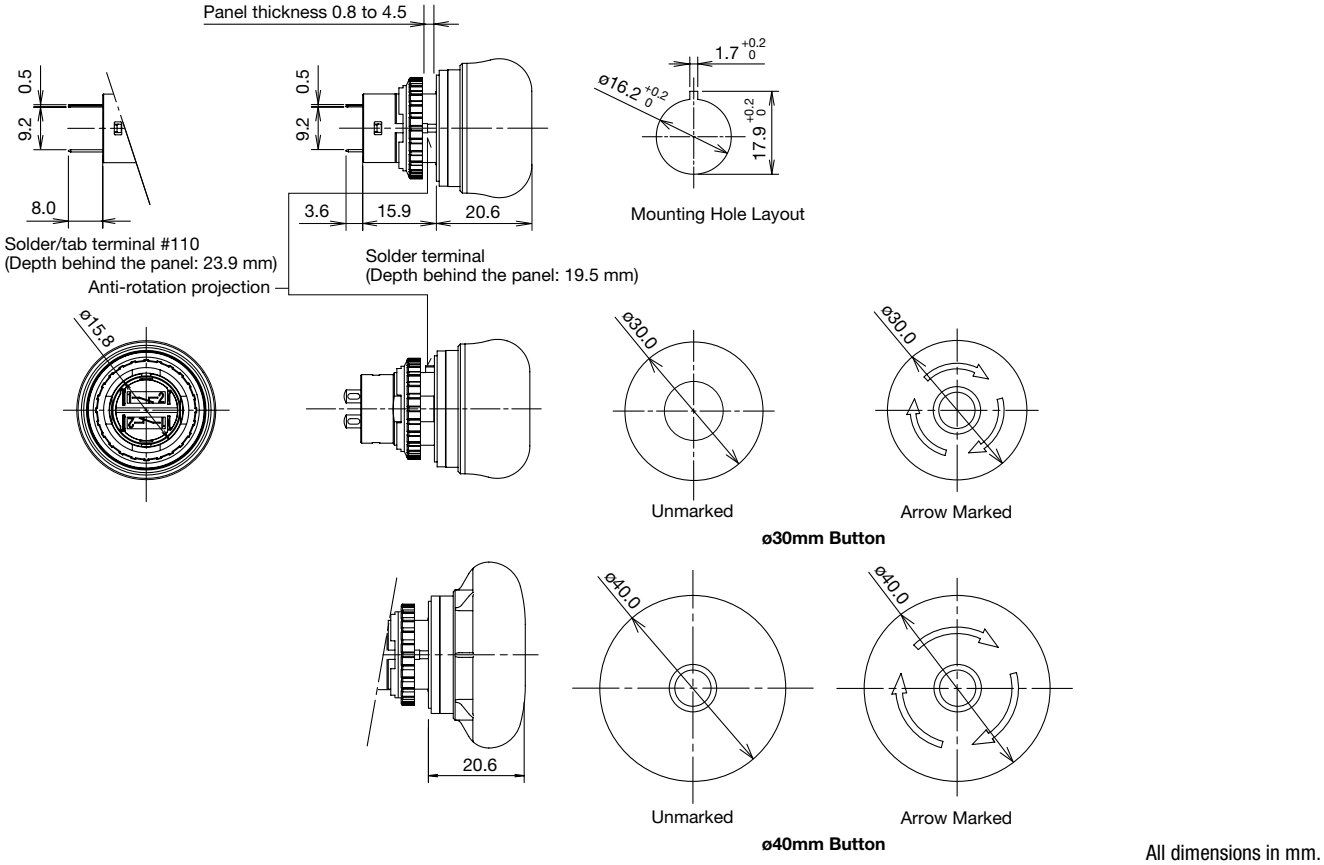

All dimensions in mm.

Mounting Hole Layout

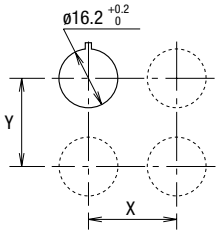

The values shown on the left are the minimum dimensions for mounting with other ø16 mm pushbuttons. For other control units of different sizes and styles, determine the values according to dimensions, operation, and wiring.

	X	Y
ø30 mm Button	40 mm min.	40mm min.
ø40 mm Button	50 mm min.	50mm min.

• See D-047 for accessories and replacement parts.

Terminal Arrangement (Bottom View)

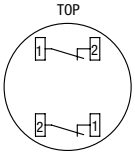

1NC: Terminals located near the TOP marking

⚠ Safety Precautions

- Turn off power to the X6 series units before installation, removal, wiring, maintenance, and inspection. Failure to turn power off may cause electrical shocks or fire hazard.
- For wiring, use wires of proper size to meet the voltage and current requirements and solder properly. Improper soldering may cause overheating and create fire hazards.

Instructions

Panel Mounting

Remove the locking ring from the operator and check that the rubber gasket is in place. Insert the operator from panel front into the panel hole. Face the side with the projection upward, and tighten the locking ring using the locking ring wrench MT-001.

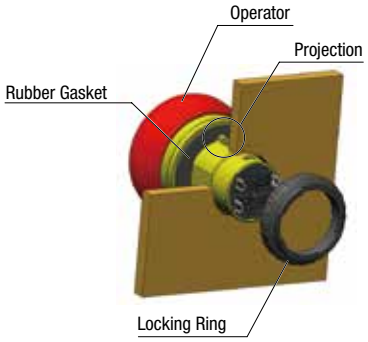

Notes for Panel Mounting

Using the locking ring wrench MT-001, tighten the locking ring to a torque of 0.88 N·m. Do not use pliers. Do not apply excessive force, otherwise the locking ring will become damaged.

Wiring

1. Applicable wire size is 1.25 mm^2 maximum.
2. Solder the terminals using a soldering iron at 310 to 350°C for 3 seconds maximum. Do not use flow or dip soldering. SnAgCu type lead-free solder is recommended. Make sure that the soldering iron touches the terminals only, not plastic parts. Do not apply external force such as bending the terminals or applying tensile force on the wires.
3. Use a non-corrosive rosin flux. To prevent the flux from entering the switch while soldering, face the terminals downward.

Correct

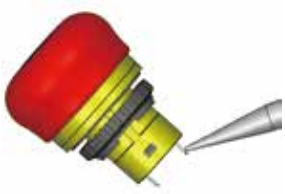

Incorrect

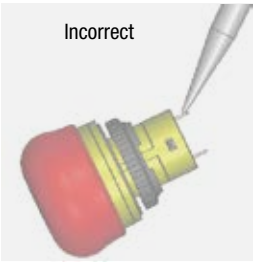

4. Because the terminal spacing is narrow, use protective tubes or heat shrinkable tubes to avoid burning the wire sheath or short circuit.
5. Apply force on the terminals in the vertical direction to the panel only, otherwise the terminals will be damaged.

Notes for Solder/tab terminal #110

1. Use quick connect of #110 and 0.5mm tab thickness.
2. To prevent short-circuit between different poles, use protective tubes or heat shrink tubes.
3. Apply force on the terminals in the vertical direction to the panel only, otherwise the terminals will be damaged.

Contact Bounce

When the button is reset by pulling or turning, the NC contacts will bounce. When designing a control circuit, take the contact bounce time into consideration (reference value: 20 ms).

Handling

Do not expose the switch to excessive shock and vibrations, otherwise the switch may be deformed or damaged, causing malfunction or operation failure.

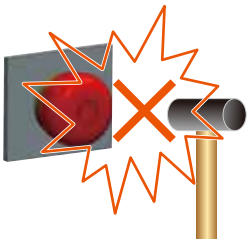

Emergency Stop Switches

X Series

High level of safety with Safe Break Action and Reverse Energy Structure.

• See website for details on approvals and standards.

Series		Type	Features
ø16 XA Series		Unibody	Small, unibody emergency stop switches. Only 19.5mm behind panel.
		With Removable Contact	ø16 mm, 4-contact Emergency Stop Switch. Round form types also available.
ø22 XW Series		Standard Bezel	Four different terminal styles. Can be used on FB series control stations.
		Mechanincal Indicator	Mechanical indicator on the operator body shows the contact status - green when NC contacts are closed - reducing maintenance work.
ø30 XN Series		Plastic Bezel	ø60mm jumbo mushroom, and LED push-on models available.
		Flush Bezel	Stylish design. Projects only 21mm from the panel.
		Padlockable	Padlockable models can be locked using padlocks when latched. Prevents unauthorized resetting.

Saves space

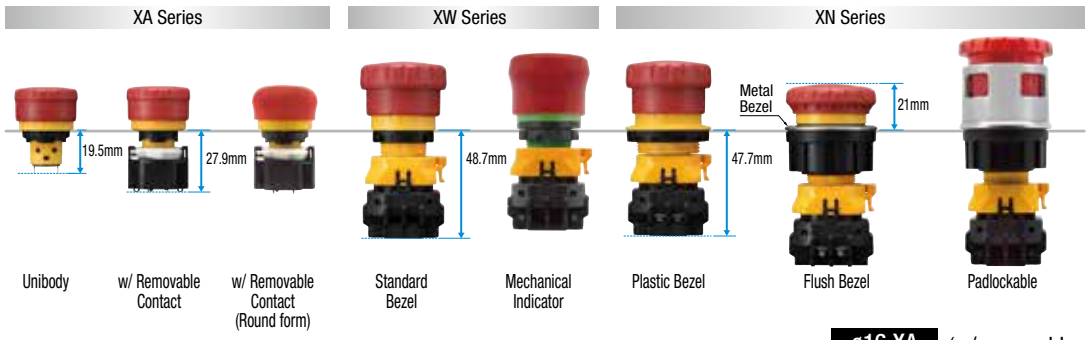

ø16 XA (w/ removable contact block)

Prevents dust build-up

The round form button design is ideal for use on consumer equipment.
The smooth and ridge-less button surface prevents dust build-up, and is also to clean

ø22 XW (Mechanical Indicator)

Normal/latched status can be checked from a distance with the mechanical indicator function.

The mechanical indicator on the operator body shows the normal/latched status (green: normal).
Reduces maintenance work and improves operation efficiency.

ø30 XN (Padlockable)

Prevents unauthorized resetting using padlocks

The padlockable emergency stop switches are push-to-lock, turn/pull-to-reset emergency stop switches. Installing the padlock(s) on latched emergency stop switches prevents unauthorized resetting.

Multiple padlocks can be installed by using a hasp

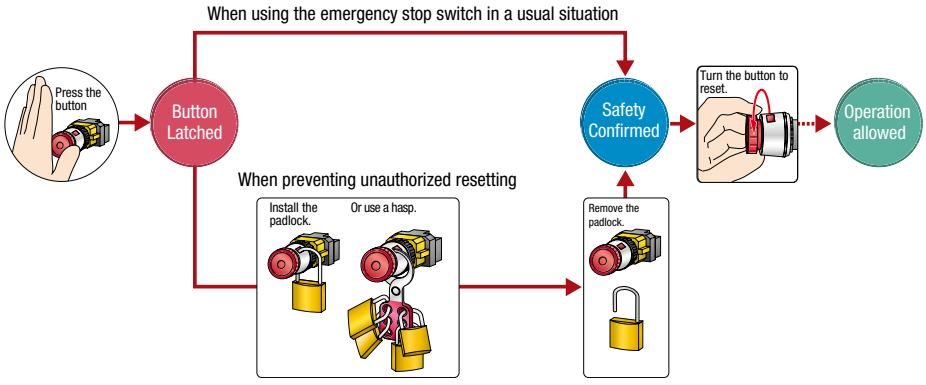

Prevent resetting using padlocks

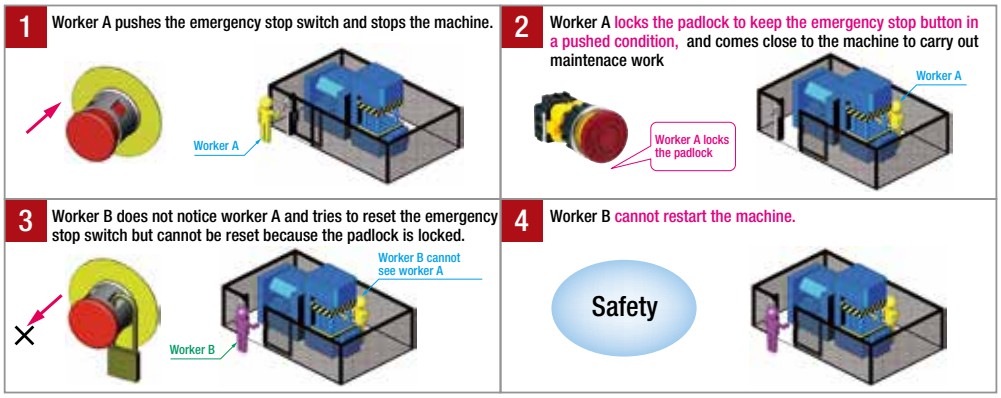

ø16 XA Series Emergency Stop Switches (Unibody)

Small, unibody emergency stop switches suitable for equipment with small mounting space. Requires only ø16mm × 19.5mm for installation.

- ø29mm and ø40mm mushroom operators
- Degree of protection IP65 and IP40 (IEC 60529)
- Dark red (Munsell 5R4/12) and bright red (Munsell 7.5R4.5/14) colors for operators of emergency stop switches.
- Gold plated silver contacts.
- Push-to-lock, pull or turn-to-reset operator
- Safety lock mechanism (IEC 60947-5-5, 6.2)
- Direct opening action mechanism (IEC 60947-5-5, 5.2, IEC60947-5-1, Annex K)

Standards and Specifications

Contact Ratings

Rated Insulation Voltage (Ui)			250V		
Thermal Current (Ith)			5A		
Rated Operating Voltage (Ue)			30V	125V	250V
Rated Operating Current	AC 50/60Hz	Resistive Load (AC-12)	—	5A	3A
		Inductive Load (AC-15)	—	3A	1.5A
	DC	Resistive Load (DC-12)	2A	0.4A	0.2A
		Inductive Load (DC-13)	1A	0.22A	0.1A
Contact Material			Gold plated silver		

- Minimum applicable load: 5V AC/DC, 1 mA (reference value) (May vary depending on the operating conditions and load.)
- The rated operating currents are measured at resistive/inductive loads as specified in IEC 60947-5-1.

Specifications

Applicable Standards	IEC 60947-5-1, EN 60947-5-1 IEC 60947-5-5, EN 60947-5-5 JIS C8201-5-1, UL508, CSA C22.2 No.14 GB14048.5
Operating Temperature	–25 to +60°C (no freezing)
Storage Temperature	–45 to +80°C (no freezing)
Operating Humidity	45 to 85% RH (no condensation)
Operating Force	Push-to-lock: 10.5N Pull to reset: 10N Turn to reset: 0.16 N·m
Minimum Force Required for Direct Opening Action	40N
Minimum Operator Stroke Required for Direct Opening Action	4.0 mm
Maximum Operator Stroke	4.5 mm
Contact Resistance	50 mΩ maximum (initial value)
Insulation Resistance	100 MΩ minimum (500V DC megger)
Overvoltage Category	II
Impulse Withstand Voltage	2.5 kV
Pollution Degree	3
Operating Frequency	900 operations/hour
Shock Resistance	Operating extremes: 150 m/s^2 Damage limits: 1000 m/s^2
Vibration Resistance	Operating extremes: 10 to 500 Hz, amplitude 0.35mm, acceleration 50 m/s^2 Damage limits: 10 to 500 Hz, amplitude 0.35 mm, acceleration 50 m/s^2
Durability	Mechanical: 250,000 Electrical: 100,000 250,000 (24V AC/DC, 100mA)
Degree of Protection	IP65, IP40 (IEC 60529)
Short-circuit Protection	250V/10A fuse (Type aM IEC 60269-1/IEC 60269-2)
Conditional Short-circuit Current	1000A
Terminal Style	Solder terminal, Solder/tab #110 terminal
Recommended Tightening Torque for Locking Ring	0.88 N·m
Applicable Wire Size	1.25 mm^2 maximum (AWG16 maximum)
Terminal Soldering Condition	310 to 350°C, within 3 seconds
Weight (approx.)	ø29mm mushroom: 14g ø40mm mushroom: 17g

Pushlock Pull/Turn Reset (Solder Terminal)

XA Series

Shape	Contact	Part No. IP40 (contact part: black)	Part No. IP65 (contact part: yellow)	① Operator Color Code
ø29mm Mushroom	1NC	XA1E-BV3U01K①	XA1E-BV3U01①	R: red RH: bright red
	2NC	XA1E-BV3U02K①	XA1E-BV3U02①	
ø40mm Mushroom	1NC	XA1E-BV4U01K①	XA1E-BV4U01①	
	2NC	XA1E-BV4U02K①	XA1E-BV4U02①	

• Solder/tab #110 terminal is also available. Specify "T" before ① in the Ordering No.
XA1E-BV3U02KR → XA1E-BV3U02KTR

Dimensions

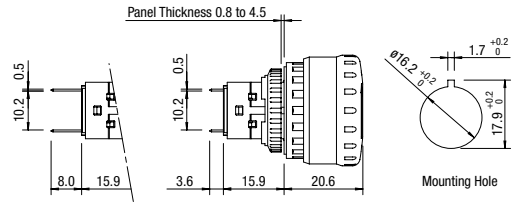

Solder/Tab Terminal #110
(Behind the panel: 23.9)

Solder Terminal
(Behind the panel: 19.5)

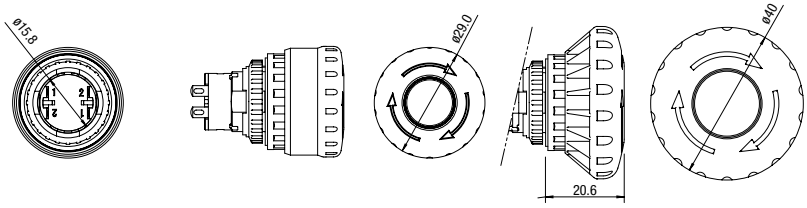

ø29 mm Mushroom

ø40 mm Mushroom

All dimensions in mm.

Terminal Arrangement (Bottom View)

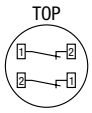

1NC: Termimals on top

Mounting Hole Layout

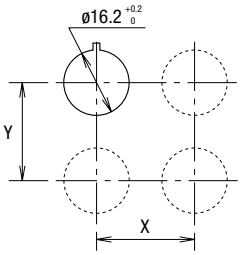

• The values shown on the left are the minimum dimensions for mounting with other ø16 mm pushbuttons. For other control units of different sizes and styles, determine the values according to the dimensions, operation, and wiring.

	X	Y
ø29mm Mushroom	40 mm minimum	
ø40mm Mushroom	50 mm minimum	

ø16 XA Series Emergency Stop Switches (w/Removable Contact Block)

Compact size - only 27.9 mm deep behind the panel. Reliable "Safe break action."

- The depth behind the panel is only 27.9 mm for 1 to 4 contacts, both on illuminated and non-illuminated.
- IDEC's original "Safe break action" ensures that the contacts open when the contact block is detached from the operator.
- 1 to 4NC main contacts and 1NO monitor contact
- Push-to-lock, Pull or Turn-to-reset operator
- Direct opening action mechanism (IEC 60947-5-5, 5.2, IEC60947-5-1, Annex K)
- Safety lock mechanism (IEC 60947-5-5, 6.2)
- Degree of protection IP65 (IEC 60529)
- Gold plated silver contacts.
- Two operator sizes: ø29 and ø40 mm
- Dark red (Munsell 5R4/12) or bright red (Munsell 7.5R4.5/14) colors are available for the operator of non-illuminated emergency stop switches.

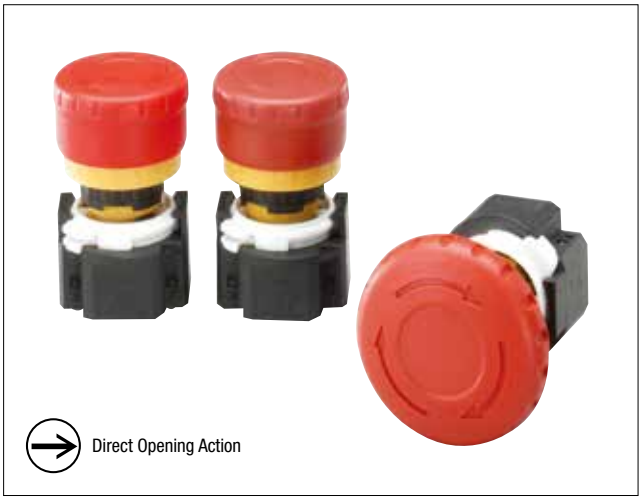

Standards and Specifications

Contact Ratings

NC main contacts (black) /NO monitor contact (blue)

Rated Insulation Voltage (Ui)				300V (illuminated part: 60V)		
Rated Thermal Current (Ith)				5A		
Rated Operating Voltage (Ue)				30V	125V	250V
Rated Operating Current	Main Contacts	AC 50/60 Hz	Resistive Load (AC-12)	–	3A	3A
			Inductive Load (AC-15)	–	1.5A	1.5A
		DC	Resistive Load (DC-12)	2A	0.4A	0.2A
			Inductive Load (DC-13)	1A	0.22A	0.1A
	Monitor Contacts	AC 50/60 Hz	Resistive Load (AC-12)	–	1.2A	0.6A
			Inductive Load (AC-14)	–	0.6A	0.3A
		DC	Resistive Load (DC-12)	2A	0.4A	0.2A
			Inductive Load (DC-13)	1A	0.22A	0.1A
Contact Material				Gold plated silver		

- Minimum applicable load: 5V AC/DC, 1 mA (reference value) (Operating area may vary according to the operating conditions and load types.)
- The rated operating currents are measured at resistive/inductive load types specified in IEC 60947-5-1.

Illumination Ratings

Rated Voltage	Operating Voltage	Rated Current
24V AC/DC	24V AC/DC ±10%	11 mA

Specifications

Applicable Standards	IEC60947-5-1, EN60947-5-1 IEC60947-5-5, EN60947-5-5, JIS C8201-5-1, UL991, NFPA79, UL508, CSA C22.2 No.14, GB14048.5
Operating Temperature	–25 to +60°C (no freezing) Illuminated: –25 to +55°C (no freezing)
Storage Temperature	–45 to +80°C
Operating Humidity	45 to 85% RH (no condensation)
Operating Force	Push to lock: 10.5N Pull to reset: 10N Turn to reset: 0.16 N·m
Minimum Force Required for Direct Opening Action	60N
Minimum Operator Stroke Required for Direct Opening Action	4.0 mm
Maximum Operator Stroke	4.5 mm
Contact Resistance	50 mΩ maximum (initial value)
Insulation Resistance	100 MΩ minimum (500V DC megger)
Overvoltage Category	II
Impulse Withstand Voltage	2.5 kV
Pollution Degree	3 (inside LED unit: 2)
Operation Frequency	900 operations/hour
Shock Resistance	Operating extremes: 150 m/s^2 Damage limits: 1000 m/s^2
Vibration Resistance	Operating extremes: 10 to 500 Hz, amplitude 0.35 mm acceleration 50 m/s^2 Damage limits: 10 to 500 Hz, amplitude 0.35 mm acceleration 50 m/s^2
Mechanical Life	250,000 operations minimum
Electrical Life	100,000 operations min 250,000 operations min (24V AC/DC, 100 mA)
Degree of Protection	IP65 (IEC60529)
Short-circuit Protection	250V/10A fuse (Type aM, IEC60269-1/IEC60269-2)
Conditional Short-circuit Current	1000A
Terminal Style	Solder terminal, PC board terminal
Recommended Tightening Torque for Locking Ring	0.88 N·m
Connectable Wire	1.25 mm^2 maximum (AWG16 maximum)
Soldering Conditions	310 to 350°C, 3 seconds maximum
Weight	ø29 mm: 23g, ø40 mm: 28g

Pushlock Pull/Turn Reset (Solder Terminal/PC Board Terminal)

Non-illuminated

Shape	NC Main Contact	NO Monitor Contact	Part No.		Operator Color Code
			Solder Terminal	PC Board Terminal	
ø29mm Mushroom	1NC	—	XA1E-BV301①	XA1E-BV301V①	R: Dark red RH: Bright red
	2NC	—	XA1E-BV302①	XA1E-BV302V①	
	3NC	—	XA1E-BV303①	XA1E-BV303V①	
	4NC	—	XA1E-BV304①	XA1E-BV304V①	
	1NC	1NO	XA1E-BV311①	XA1E-BV311V①	
	2NC	1NO	XA1E-BV312①	XA1E-BV312V①	
	3NC	1NO	XA1E-BV313①	XA1E-BV313V①	
ø40mm Mushroom	1NC	—	XA1E-BV401①	XA1E-BV401V①	
	2NC	—	XA1E-BV402①	XA1E-BV402V①	
	3NC	—	XA1E-BV403①	XA1E-BV403V①	
	4NC	—	XA1E-BV404①	XA1E-BV404V①	
	1NC	1NO	XA1E-BV411①	XA1E-BV411V①	
	2NC	1NO	XA1E-BV412①	XA1E-BV412V①	
	3NC	1NO	XA1E-BV413①	XA1E-BV413V①	

- Specify a color code in place of ① in the Part No.
- Pushlock pull/turn reset switches are locked when pressed, and reset when pulled or turned clockwise.
- Terminal cover (XA9Z-VL2) is ordered separately.
- For EMO Switches, see D-052.

Illuminated

Shape	NC Main Contact	NO Monitor Contact	Part No.		Operator Color
			Solder Terminal	PC Board Terminal	
ø29mm Mushroom	1NC	—	XA1E-LV301Q4R	XA1E-LV301Q4VR	Dark red only
	2NC	—	XA1E-LV302Q4R	XA1E-LV302Q4VR	
	3NC	—	XA1E-LV303Q4R	XA1E-LV303Q4VR	
	4NC	—	XA1E-LV304Q4R	XA1E-LV304Q4VR	
	1NC	1NO	XA1E-LV311Q4R	XA1E-LV311Q4VR	
	2NC	1NO	XA1E-LV312Q4R	XA1E-LV312Q4VR	
	3NC	1NO	XA1E-LV313Q4R	XA1E-LV313Q4VR	
ø40mm Mushroom	1NC	—	XA1E-LV401Q4R	XA1E-LV401Q4VR	
	2NC	—	XA1E-LV402Q4R	XA1E-LV402Q4VR	
	3NC	—	XA1E-LV403Q4R	XA1E-LV403Q4VR	
	4NC	—	XA1E-LV404Q4R	XA1E-LV404Q4VR	
	1NC	1NO	XA1E-LV411Q4R	XA1E-LV411Q4VR	
	2NC	1NO	XA1E-LV412Q4R	XA1E-LV412Q4VR	
	3NC	1NO	XA1E-LV413Q4R	XA1E-LV413Q4VR	

- Pushlock pull/turn reset switches are locked when pressed, and reset when pulled or turned clockwise.
- Terminal cover (XA9Z-VL2) is ordered separately.

ø16 XA Series Emergency Stop Switches (w/Removable Contact Block)

Dimensions

Non-illuminated

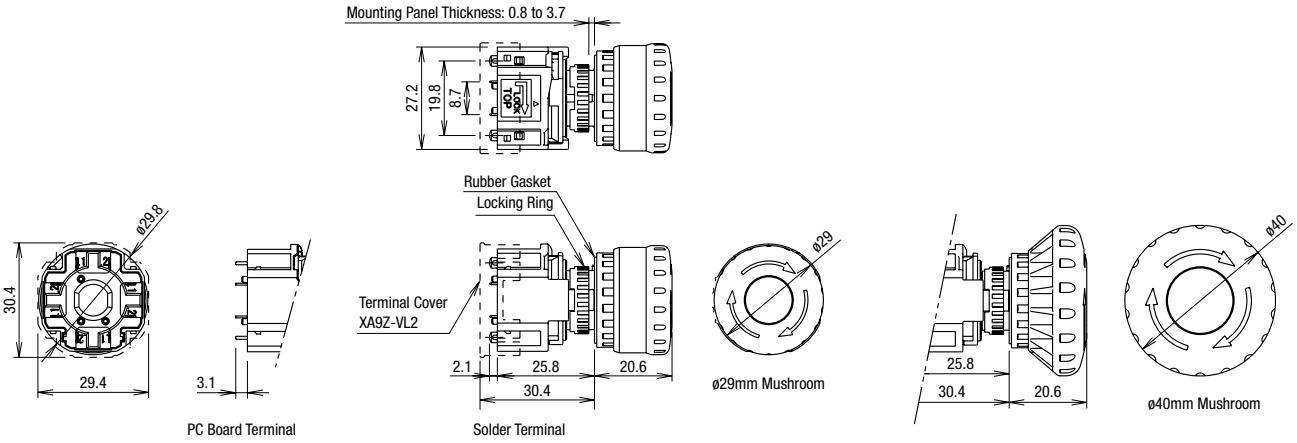

Illuminated

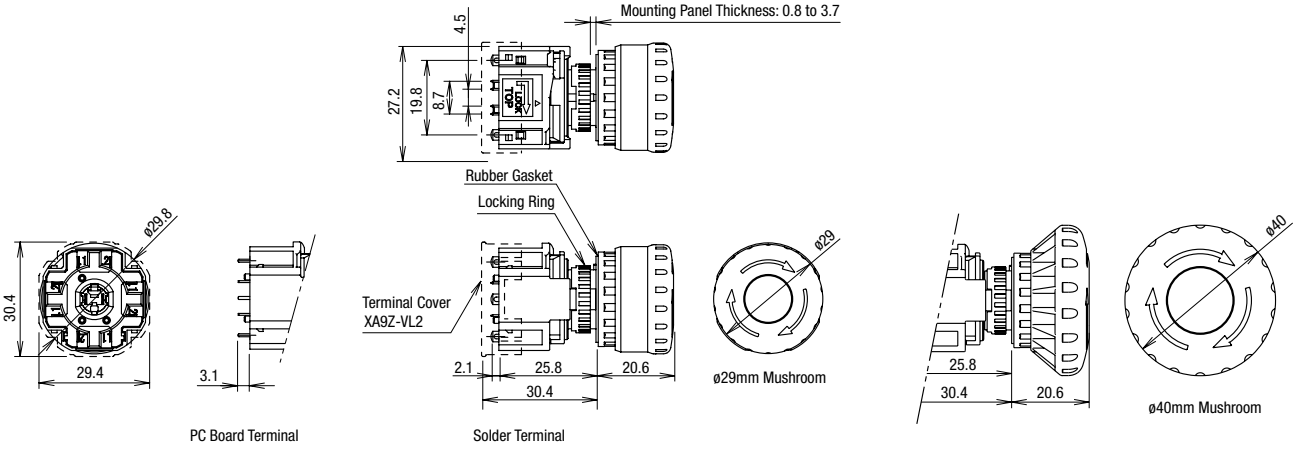

PC Board Layout (Bottom View)

Non-Illuminated

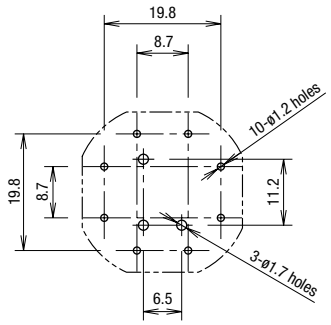

Illuminated

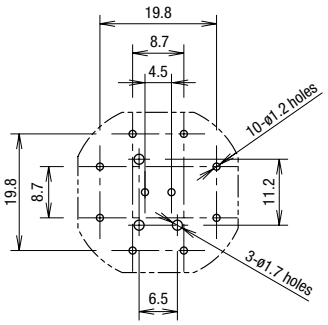

Panel Cut-out

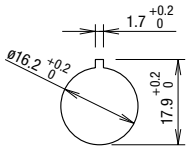

All dimensions in mm.

Mounting Hole Layout

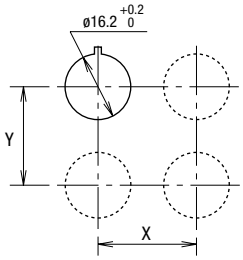

	X	Y
ø29mm Mushroom	40 mm minimum	
ø40mm Mushroom	50 mm minimum	

- The values shown above are the minimum dimensions for mounting with other ø16 mm pushbuttons. For other control units of different sizes and styles, determine the values according to the dimensions, operation, and wiring convenience.

LED Unit Internal Circuit

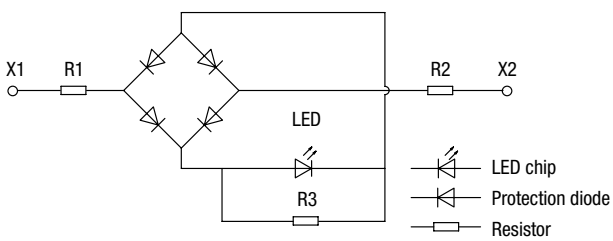

Terminal Arrangement (Bottom View)

Non-illuminated

NC main contacts (black) only
NC main contacts (black): Terminals 1-2

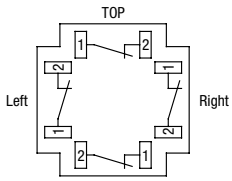

1NC: Terminals on right
2NC: Terminals on right and left
3NC: Terminals on right, left, and top

With NO monitor contacts (blue)
NC main contacts (black): Terminals 1-2
NO monitor contacts (blue): Terminals 3-4

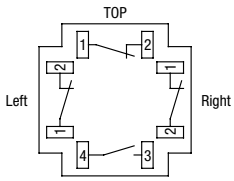

1NC: Terminals on top
2NC: Terminals on right and left

Illuminated

NC main contacts only (black)
NC main contacts(black): Terminals 1-2

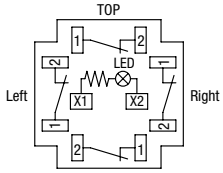

1NC: Terminals on right
2NC: Terminals on right and left
3NC: Terminals on right, left, and top

With NO monitor contacts (blue)
NC main contacts (black): Terminals 1-2
NO monitor contacts (blue): Terminals 3-4

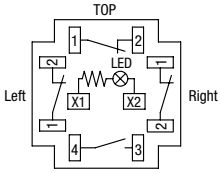

1NC: Terminals on top
2NC: Terminals on right and left

ø16 XA Series Emergency Stop Switches Round Form (w/Removable Contact Blocks)

Smooth Round Form Buttons

- IDEC's unique Reverse Energy Structure
- Depth behind the panel: 27.9mm
- Arrow marked and unmarked buttons.
- The smooth button is ideal for applications that require utmost cleanliness.Prevents dust built-up, and is also easy to clean.
- Two reset operations - pushlock pull or turn reset.
- Gold plated silver contacts.
- Direct opening action (IEC60947-5-5:5.2, IEC60947-5-1, Annex K)
- Safety lock mechanism (IEC60947-5-5:6.2)
- Degree of protection IP65 (IEC60529)

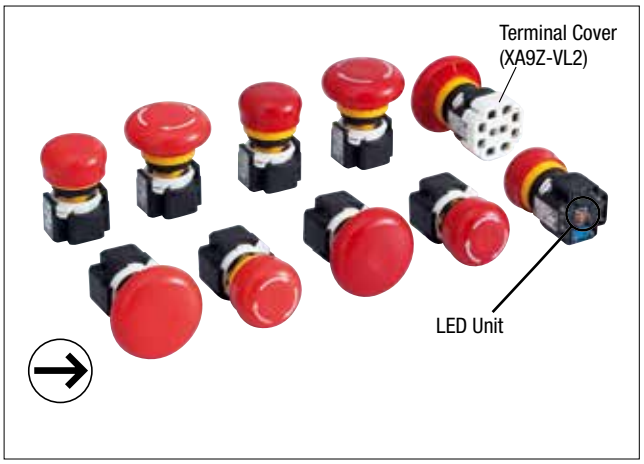

Standards and Specifications

Contact Ratings

NC main contacts (black) /NO monitor contact (blue)

Rated Insulation Voltage (Ui)				300V (illuminated part: 60V)		
Rated Thermal Current (Ith)				5A		
Rated Operating Voltage (Ue)				30V	125V	250V
Rated Operating Current	Main Contacts	AC 50/60 Hz	Resistive Load (AC-12)	–	3A	3A
			Inductive Load (AC-15)	–	1.5A	1.5A
		DC	Resistive Load (DC-12)	2A	0.4A	0.2A
			Inductive Load (DC-13)	1A	0.22A	0.1A
	Monitor Contacts	AC 50/60 Hz	Resistive Load (AC-12)	–	1.2A	0.6A
			Inductive Load (AC-14)	–	0.6A	0.3A
		DC	Resistive Load (DC-12)	2A	0.4A	0.2A
			Inductive Load (DC-13)	1A	0.22A	0.1A
Contact Material				Gold plated silver		

- Minimum applicable load: 5V AC/DC, 1 mA (reference value) (Operating area may vary according to the operating conditions and load types.)
- The rated operating currents are measured at resistive/inductive load types specified in IEC 60947-5-1.

Illumination Ratings

Rated Voltage	Operating Voltage	Rated Current
24V AC/DC	24V AC/DC ±10%	11 mA

Specifications

Applicable Standards	IEC60947-5-1, EN60947-5-1 IEC60947-5-5, EN60947-5-5, JIS C8201-5-1, UL991, NFPA79, UL508, CSA C22.2 No.14, GB14048.5
Operating Temperature	–25 to +60°C (no freezing) Illuminated: –25 to +55°C (no freezing)
Storage Temperature	–45 to +80°C
Operating Humidity	45 to 85% RH (no condensation)
Operating Force	Push to lock: 10.5N Pull to reset: 10N Turn to reset: 0.16 N·m
Minimum Force Required for Direct Opening Action	60N
Minimum Operator Stroke Required for Direct Opening Action	4.0 mm
Maximum Operator Stroke	4.5 mm
Contact Resistance	50 mΩ maximum (initial value)
Insulation Resistance	100 MΩ minimum (500V DC megger)
Overvoltage Category	II
Impulse Withstand Voltage	2.5 kV
Pollution Degree	3 (inside LED unit: 2)
Operation Frequency	900 operations/hour
Shock Resistance	Operating extremes: 150 m/s² Damage limits: 1000 m/s²
Vibration Resistance	Operating extremes: 10 to 500 Hz, amplitude 0.35 mm, acceleration 50 m/s² Damage limits: 10 to 500 Hz, amplitude 0.35 mm, acceleration 50 m/s²
Mechanical Life	250,000 operations minimum
Electrical Life	100,000 operations min 250,000 operations min (24V AC/DC, 100 mA)
Degree of Protection	IP65 (IEC60529)
Short-circuit Protection	250V/10A fuse (Type aM, IEC60269-1/IEC60269-2)
Conditional Short-circuit Current	1000A
Terminal Style	Solder terminal, PC board terminal
Recommended Tightening Torque for Locking Ring	0.88 N·m
Connectable Wire	1.25 mm² maximum (AWG16 maximum)
Soldering Conditions	310 to 350°C, 3 seconds maximum
Weight	ø30 mm: 23g, ø40 mm: 28g

Pushlock Pull/Turn Reset (Solder Terminal)

Non-illuminated

Shape	NC Main Contact	NO Monitor Contact	Part No. (Ordering Part No.)	
			Unmarked	Arrow Marked
ø30 Mushroom	3NC	–	XA1E-BV3T03RH	XA1E-BV3T03RM
	4NC	–	XA1E-BV3T04RH	XA1E-BV3T04RM
	1NC	1NO	XA1E-BV3T11RH	XA1E-BV3T11RM
	2NC	1NO	XA1E-BV3T12RH	XA1E-BV3T12RM
	3NC	1NO	XA1E-BV3T13RH	XA1E-BV3T13RM
ø40 Mushroom	3NC	–	XA1E-BV4T03RH	XA1E-BV4T03RM
	4NC	–	XA1E-BV4T04RH	XA1E-BV4T04RM
	1NC	1NO	XA1E-BV4T11RH	XA1E-BV4T11RM
	2NC	1NO	XA1E-BV4T12RH	XA1E-BV4T12RM
	3NC	1NO	XA1E-BV4T13RH	XA1E-BV4T13RM

- Pushlock pull/turn reset switches are locked when pressed, and reset when pulled or turned clockwise.
- 1NC and 2NC contacts also available.
- Terminal cover (XA9Z-VL2) is ordered separately.
- For PC board terminals, add "V" in front of "R" in the part number.
  Example: **XA1E-BV3T03RH** => **XA1E-BV3T03VRH**

Illuminated

Shape	NC Main Contact	NO Monitor Contact	Part No. (Ordering Part No.)	
			Unmarked	Arrow Marked
ø30 Mushroom	1NC	–	XA1E-LV3T01Q4R	XA1E-LV3T01Q4RM
	2NC	–	XA1E-LV3T02Q4R	XA1E-LV3T02Q4RM
	3NC	–	XA1E-LV3T03Q4R	XA1E-LV3T03Q4RM
	4NC	–	XA1E-LV3T04Q4R	XA1E-LV3T04Q4RM
	1NC	1NO	XA1E-LV3T11Q4R	XA1E-LV3T11Q4RM
	2NC	1NO	XA1E-LV3T12Q4R	XA1E-LV3T12Q4RM
	3NC	1NO	XA1E-LV3T13Q4R	XA1E-LV3T13Q4RM
ø40 Mushroom	1NC	–	XA1E-LV4T01Q4R	XA1E-LV4T01Q4RM
	2NC	–	XA1E-LV4T02Q4R	XA1E-LV4T02Q4RM
	3NC	–	XA1E-LV4T03Q4R	XA1E-LV4T03Q4RM
	4NC	–	XA1E-LV4T04Q4R	XA1E-LV4T04Q4RM
	1NC	1NO	XA1E-LV4T11Q4R	XA1E-LV4T11Q4RM
	2NC	1NO	XA1E-LV4T12Q4R	XA1E-LV4T12Q4RM
	3NC	1NO	XA1E-LV4T13Q4R	XA1E-LV4T13Q4RM

- Pushlock pull/turn reset switches are locked when pressed, and reset when pulled or turned clockwise.
- Terminal cover (XA9Z-VL2) is ordered separately.
- For PC board terminals, add "V" in front of "R" in the part number.
  Example: **XA1E-LV3T01Q4R** => **XA1E-LV3T01Q4VR**

ø16 XA Series Emergency Stop Switches Round Form (w/Removable Contact Blocks)

Dimensions

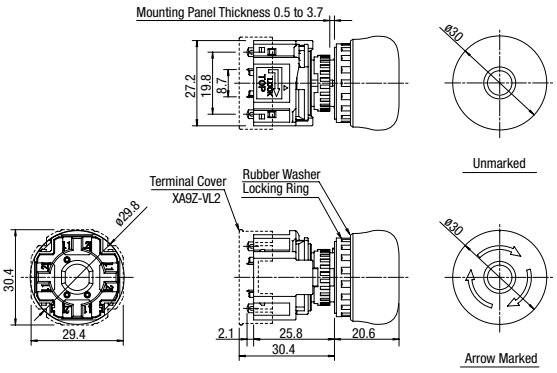

ø30 Mushroom

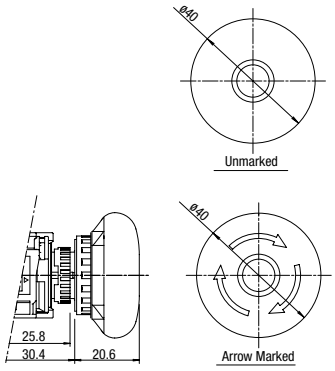

ø40 Mushroom

Panel Cut-out

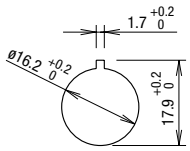

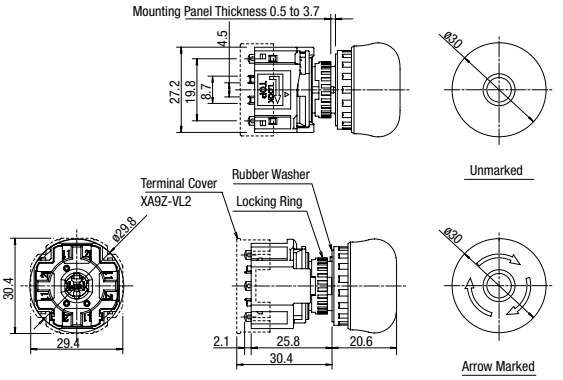

ø30 Mushroom

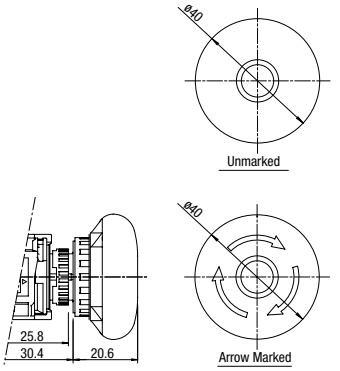

ø40 Mushroom

Terminal Arrangement (Bottom View)

Non-illuminated

NC main contacts (black) only
NC main contacts (black): Terminals 1-2

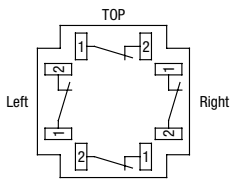

1NC: Terminals on right
2NC: Terminals on right and left
3NC: Terminals on right, left, and top

With NO monitor contacts (blue)
NC main contacts (black): Terminals 1-2
NO monitor contacts (blue): Terminals 3-4

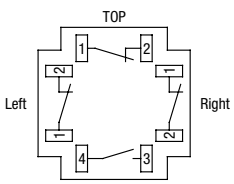

1NC: Terminals on top
2NC: Terminals on right and left

Illuminated

NC main contacts only (black)
NC main contacts(black): Terminals 1-2

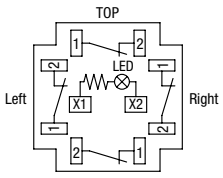

1NC: Terminals on right
2NC: Terminals on right and left
3NC: Terminals on right, left, and top

With NO monitor contacts (blue)
NC main contacts (black): Terminals 1-2
NO monitor contacts (blue):Terminals 3-4

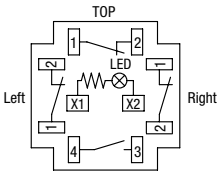

1NC: Terminals on top
2NC: Terminals on right and left

Mounting Hole Layout

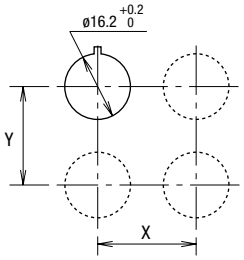

	X	Y
ø29mm Mushroom	40 mm minimum	
ø40mm Mushroom	50 mm minimum	

- The values shown above are the minimum dimensions for mounting with other ø16 mm pushbuttons. For other control units of different sizes and styles, determine the values according to the dimensions, operation, and wiring convenience.

LED Unit Internal Circuit

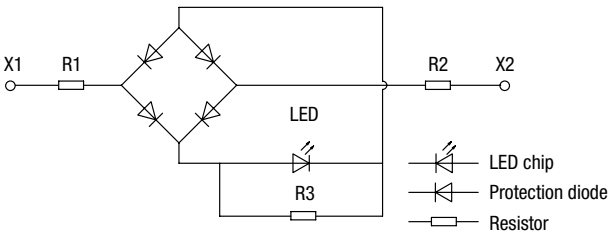

⚠ Safety Precautions

- Turn off power to the XA series emergency stop switch before starting installation, removal, wiring, maintenance, and inspection of the relays. Failure to turn power off may cause electrical shock or fire hazard.
- Use the LED unit removal tool when replacing the LED unit to avoid burn on your hands.
- Use wires of the proper size to meet the voltage and current requirements, and solder the wires correctly. If soldering is incomplete, the wire may heat during operation, causing fire hazard.

Instructions

Removing the Contact Block

First unlock the operator button. While pushing up the white bayonet ring, using a small screwdriver (width: 2.5 to 3 mm) if necessary, turn the contact block counterclockwise and pull out. **Do not exert excessive force when using a screwdriver, otherwise the bayonet ring may be damaged.**

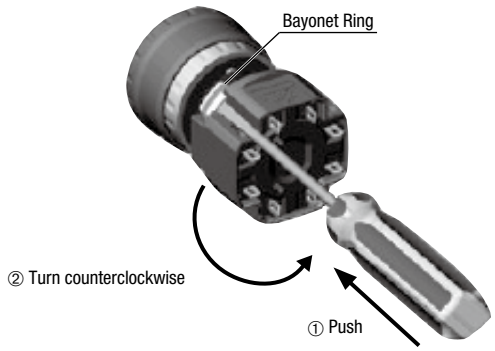

Notes for Removing the Contact Block

1. When the contact block is removed, the monitor contact (NO contact) is closed.
2. While removing the contact block, do not exert excessive force, otherwise the switch may be damaged.

Panel Mounting

Remove the locking ring from the operator and check that the rubber gasket is in place. Insert the operator from panel front into the panel hole. Face the side with the anti-rotation protrusion on the operator upward, and tighten the locking ring.

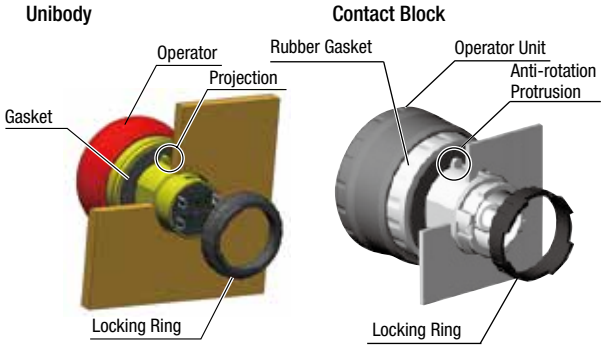

Notes for Panel Mounting

To mount the XA emergency stop switches onto a panel, tighten the locking ring to a tightening torque of 0.88 N·m maximum using ring wrench MT-001. Do not use pliers. Do not exert excessive force, otherwise the locking ring may be damaged.

Installing the Contact Block

First turn the bayonet ring to the unlocked position.

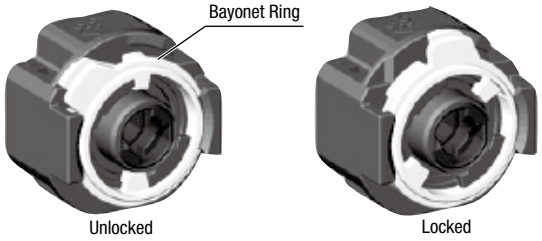

Align the small ▲ marking on the edge of the operator base with the TOP marking on the contact block. Press the contact block onto the operator and turn the contact block clockwise until the bayonet ring clicks.

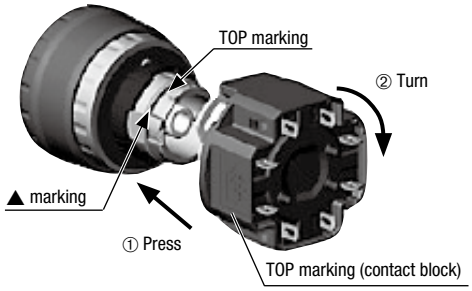

Notes for Installing the Contact Block

Check that the contact block is securely installed on the operator. When the emergency stop switch is properly assembled, the bayonet ring is in place as shown below.

Removing the LED Unit (Contact Block)

Pull out the LED unit while squeezing the latches on the LED unit using the LED unit removal tool (MT-101).

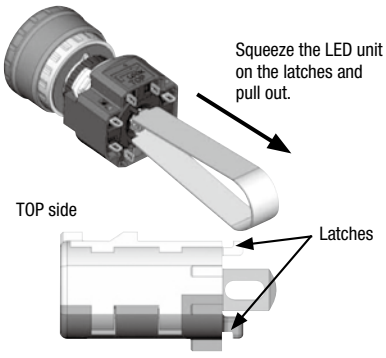

Installing the LED Unit (with Removable Contact Block)

Align the to of the LED unit with the TOP marking on the contact block. Push the LED unit into the contact block.

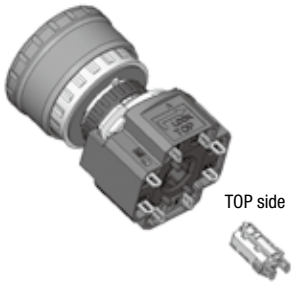

Wiring

1. The applicable wire size is 1.25 mm^2 maximum.
2. Solder the terminal at a temperature of 310 to 350°C within 3 seconds using a soldering iron. Sn-Ag-Cu type is recommended when using lead-free solder. When soldering, do not touch the enabling switch with the soldering iron. Also ensure that no tensile force is applied to the terminal. Do not bend the terminal or apply excessive force to the terminal.
3. Use a non-corrosive rosin flux. To prevent the flux from entering the switch while soldering, face the terminals downward.
4. Because the terminal spacing is narrow, use protective tubes or heat shrinkable tubes to avoid burning of wire coating or short circuit.

Solder/Tab Terminal #110

1. Use #110 receptacles for 0.5mm-thick tabs.
2. Because the terminal spacing is narrow, use protective tubes or heat shrinkable tubes of 0.5mm minimum in thickness.
3. Do not apply force on the terminals in the direction other than vertical to the mounting panel, otherwise the terminals will be damaged.

PC Board Terminal

1. When mounting a contact block on a PC board, provide sufficient rotating space for the PC board when installing and removing the contact block.
2. When mounting an XA emergency stop switch on a PC board, make sure that the operator is securely installed.

About PC Board and Circuit Design

1. Use PC boards made of glass epoxy copper-clad laminated sheets of 1.6 mm in thickness, with double-sided through hole.
2. PC boards and circuits must withstand rated voltage and current, including the instantaneous current and voltage at switching.
3. The minimum applicable load is 5V AC/DC, 1 mA. This value may vary according to the operating environment and load.
4. Within the 2.8* mm areas shown in the figure below, terminals touch the PC board, resulting in possible short circuit on the printed circuit. When designing a PC board pattern, take this possibility into consideration.

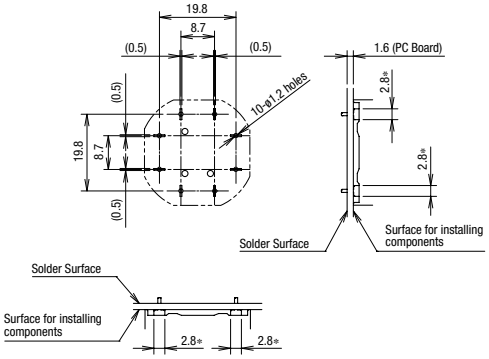

Installing Insulation Terminal Cover

To install the terminal cover (XA9Z-VL2), align the TOP marking on the terminal cover with TOP marking on the contact block, and press the terminal cover toward the contact block.

Note: For wiring, insert the wires into the holes in the terminal cover before soldering.

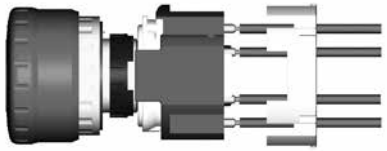

Contact Bounce

When the button is reset by pulling or turning, the NC main contacts will bounce. When pressing the button, the NO monitor contacts will bounce. When designing a control circuit, take the contact bounce time into consideration (reference value: 20 ms).

Nameplate

When anti-rotation is not required, remove the projection from the nameplate using pliers.

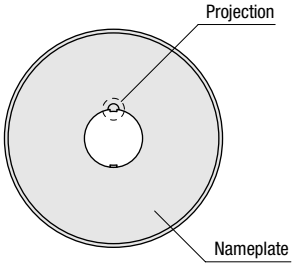

Handling

Do not expose the switch to excessive shock and vibration, otherwise the switch may be deformed or damaged, causing malfunction or operation failure.

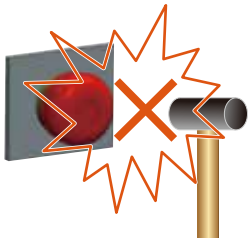

ø22 XW Series Emergency Stop Switches

ø22 mm, 4-contact Emergency Stop Switch. Compact size—only 37.1 mm deep behind the panel (screw terminal style 48.7 mm with terminal cover). Reliable "Safe break action."

- The depth behind the panel is only 37.1 mm for 1 to 4 contacts (screw terminal style 48.7 mm with terminal cover).
- The same depth behind the panel for illuminated and non-illuminated switches.
- IDEC's original "Safe break action" ensures that the contacts open when the contact block is detached from the operator.
- 1 to 4NC main contacts and 1 or 2NO monitor contact
- Push-to-lock, Pull or Turn-to-reset operator
- Direct opening action mechanism (IEC60947-5-5, 5.2, IEC60947-5-1, Annex K)
- Safety lock mechanism (IEC60947-5-5, 6.2)
- Degree of protection IP65, IP67 (IEC60529)
- Durable, gold plated silver contacts.
- Screw terminal style is finger-safe (IP20).
- Two operator sizes: ø40 and ø60 mm
- Dark red (Munsell 5R4/12) or bright red (Munsell 7.5R4.5/14) colors are available for the non-illuminated operator.
- Push-ON illumination available (operator size: ø60)
- Connector style available to reduce wiring time and wiring mistakes.

Standards and Specifications

Contact Ratings

(NC main contacts/NO monitor contact)

Rated Insulation Voltage (Ui)			Screw Terminal	250V		
			Solder Terminal	300V		
			PC Board Terminal			
			Connector	125V		
Rated Thermal Current (Ith)				5A (connector style: 2.5A)		
Rated Operating Voltage (Ue)				30V	125V	250V (Note 3)
Rated Operating Current	Main Contacts	AC 50/60 Hz	Resistive Load (AC-12)	–	5A (Note 1)	3A
			Inductive Load (AC-15)	–	3A (Note 2)	1.5A
		DC	Resistive Load (DC-12)	2A	0.4A	0.2A
			Inductive Load (DC-13)	1A	0.22A	0.1A
	Monitor Contacts	AC 50/60 Hz	Resistive Load (AC-12)	–	1.2A	0.6A
			Inductive Load (AC-14)	–	0.6A	0.3A
		DC	Resistive Load (DC-12)	2A	0.4A	0.2A
			Inductive Load (DC-13)	1A	0.22A	0.1A
Contact Material				Gold plated silver		

- Minimum applicable load: 5V AC/DC, 1 mA (reference value) (Operating area depends on the operating conditions and load types.)
- The rated operating currents are measured at resistive/inductive load types specified in JIS C8201-5-1.

Note 1: Solder terminal/PC board terminal: 3A, Connector: 2.5A

Note 2: Solder terminal/PC board terminal: 1.5A

Note 3: Except for connector style.

Illumination Ratings

Rated Voltage	Operating Voltage	Rated Current
24V AC/DC	24V AC/DC ±10%	5 mA

Note: An LED lamp is built into the contact block and cannot be replaced.

Specifications

Applicable Standards	IEC60947-5-1, EN60947-5-1 IEC60947-5-5 (Note), EN60947-5-5 JIS C8201-5-1, UL508, UL991, NFPA79, CSA C22.2 No. 14, GB14048.5
Operating Temperature	Non-illuminated: –25 to +60°C (no freezing) LED illuminated: –25 to +55°C (no freezing)
Storage Temperature	–45 to +80°C
Operating Humidity	45 to 85% RH (no condensation)
Operating Force	Push to lock: 32N Pull to reset: 21N Turn to reset: 0.27 N·m
Minimum Force Required for Direct Opening Action	80N
Minimum Operator Stroke Required for Direct Opening Action	4.0 mm
Maximum Operator Stroke	4.5 mm
Contact Resistance	50 mΩ maximum (initial value) Connector style: 30 mΩ (Note)
Insulation Resistance	100 MΩ minimum (500V DC megger)
Overvoltage Category	II
Impulse Withstand Voltage	2.5 kV
Pollution Degree	3 (connector style: 2)
Operation Frequency	900 operations/hour
Shock Resistance	Operating extremes: 150 m/s² Damage limits: 1000 m/s²
Vibration Resistance	Operating extremes: 10 to 500 Hz, amplitude 0.35 mm, acceleration 50 m/s² Damage limits: 10 to 500 Hz, amplitude 0.35 mm, acceleration 50 m/s²
Mechanical Life	250,000 operations minimum
Electrical Life	100,000 operations minimum 250,000 operations minimum (24V AC/DC, 100 mA)
Degree of Protection	Panel front: IP65, IP67 (IEC 60529) Terminal Protection: IP20 (screw terminal, when using XW9Z-VL2MF)
Short-circuit Protection	250V/10A fuse (Type aM, IEC60269-1/IEC60269-2)
Conditional Short-circuit Current	1000A
Terminal Style	Solder terminal, PC board terminal, M3 screw terminal, Connector
Recommended Tightening Torque for Locking Ring	2.0 N·m
Connectable Wire	Screw terminal: 0.75 to 1.25 mm² (AWG18 to 16) Solder terminal / PC board terminal: 1.25 mm² maximum (AWG16 maximum) Connector style: 0.3 to 0.85 mm² (AWG22 to 18)
Soldering Conditions	310 to 350°C, 3 seconds maximum
Recommended Tightening Torque for Terminal Screw	0.6 to 1.0 N·m
Weight	ø40 mm: 72g ø60 mm: 81g

Note: When connecting the applicable connector to a 1m wire of 0.3 mm² (AWG22).

ø22 XW Series Emergency Stop Switches

XW Series Emergency Stop Switches

Non-illuminated Pushlock Pull / Turn Reset (Screw Terminal)

Shape	NC Main Contact	NO Monitor Contact	Part No.		①Operator Color Code
			IP20	w/Terminal Cover	
ø40mm Mushroom	1NC	—	XW1E-BV401MF①	XW1E-BV401M①	R: Dark red RH: Bright red
	2NC	—	XW1E-BV402MF①	XW1E-BV402M①	
	3NC	—	XW1E-BV403MF①	XW1E-BV403M①	
	4NC	—	XW1E-BV404MF①	XW1E-BV404M①	
	1NC	1NO	XW1E-BV411MF①	XW1E-BV411M①	
	2NC	1NO	XW1E-BV412MF①	XW1E-BV412M①	
	3NC	1NO	XW1E-BV413MF①	XW1E-BV413M①	
	2NC	2NO	XW1E-BV422MF①	XW1E-BV422M①	
ø60mm Mushroom	1NC	—	XW1E-BV501MF①	XW1E-BV501M①	
	2NC	—	XW1E-BV502MF①	XW1E-BV502M①	
	3NC	—	XW1E-BV503MF①	XW1E-BV503M①	
	4NC	—	XW1E-BV504MF①	XW1E-BV504M①	
	1NC	1NO	XW1E-BV511MF①	XW1E-BV511M①	
	2NC	1NO	XW1E-BV512MF①	XW1E-BV512M①	
	3NC	1NO	XW1E-BV513MF①	XW1E-BV513M①	
	2NC	2NO	XW1E-BV522MF①	XW1E-BV522M①	

- Specify a color code in place of ① in the Part No.
- IP20 types can be connected to solid wires only.
- For EMO Switches, see D-052.

Non-illuminated Pushlock Pull/Turn Reset (Solder Terminal/PC Board Terminal)

Shape	NC Main Contact	NO Monitor Contact	Part No.		①Operator Color Code
			Solder Terminal	PC Board Terminal	
ø40mm Mushroom	1NC	—	XW1E-BV401①	XW1E-BV401V①	R: Dark red RH: Bright red
	2NC	—	XW1E-BV402①	XW1E-BV402V①	
	3NC	—	XW1E-BV403①	XW1E-BV403V①	
	4NC	—	XW1E-BV404①	XW1E-BV404V①	
	1NC	1NO	XW1E-BV411①	XW1E-BV411V①	
	2NC	1NO	XW1E-BV412①	XW1E-BV412V①	
	3NC	1NO	XW1E-BV413①	XW1E-BV413V①	
	2NC	2NO	XW1E-BV422①	—	

- Specify a color code in place of ① in the Part No.
- Terminal cover (XA9Z-VL2) is ordered separately.

Pushlock Pull/Turn Reset (Connector)

Shape	NC Main Contact	NO Monitor Contact	Part No.	①Operator Color Code
ø40mm Mushroom	3NC	—	XW1E-BV403V①-BC	R: Dark red RH: Bright red

- Specify a color code in place of ① in the Part No.
- See D-036 for applicable connectors.

IDEC

XW Series Emergency Stop Switches

LED Illuminated Pushlock Pull/Turn Reset (Screw Terminal)

Shape	Illumination	Rated Voltage	NC Main Contact	NO Monitor Contact	Part No.	
					IP20	w/Terminal Cover
ø40mm Mushroom	LED	24V AC/DC	1NC	—	XW1E-LV401Q4MFR	XW1E-LV401Q4MR
			2NC	—	XW1E-LV402Q4MFR	XW1E-LV402Q4MR
			3NC	—	XW1E-LV403Q4MFR	XW1E-LV403Q4MR
			4NC	—	XW1E-LV404Q4MFR	XW1E-LV404Q4MR
			1NC	1NO	XW1E-LV411Q4MFR	XW1E-LV411Q4MR
			2NC	1NO	XW1E-LV412Q4MFR	XW1E-LV412Q4MR
			3NC	1NO	XW1E-LV413Q4MFR	XW1E-LV413Q4MR
			2NC	2NO	XW1E-LV422Q4MFR	XW1E-LV422Q4MR

- The operator color is red only.
- IP20 types can be connected to solid wires only.

LED Illuminated Pushlock Pull/Turn Reset (Solder Terminal/PC Board Terminal)

Shape	Illumination	Rated Voltage	NC Main Contact	NO Monitor Contact	Part No.	
					Solder Terminal	PC Board Terminal
ø40mm Mushroom	LED	24V AC/DC	1NC	—	XW1E-LV401Q4R	XW1E-LV401Q4VR
			2NC	—	XW1E-LV402Q4R	XW1E-LV402Q4VR
			3NC	—	XW1E-LV403Q4R	XW1E-LV403Q4VR
			4NC	—	XW1E-LV404Q4R	XW1E-LV404Q4VR
			1NC	1NO	XW1E-LV411Q4R	XW1E-LV411Q4VR
			2NC	1NO	XW1E-LV412Q4R	XW1E-LV412Q4VR
			3NC	1NO	XW1E-LV413Q4R	XW1E-LV413Q4VR
			2NC	2NO	XW1E-LV422Q4R	—

- The operator color is red only.
- Terminal cover (XA9Z-VL2) is ordered separately.

Push-ON LED Illuminated Pushlock Pull/Turn Reset (Screw Terminal)

Shape	Illumination	Rated Voltage	NC Main Contact	NO Monitor Contact	Part No.	
					IP20	w/Terminal Cover
ø40mm Mushroom	LED	24V AC/DC	3NC	—	XW1E-TV403Q4MFR	XW1E-TV403Q4MR
			2NC	1NO	XW1E-TV412Q4MFR	XW1E-TV412Q4MR

- The operator color is red only.
- Push-ON is illuminated when the operator is latched, and turns off when reset.
- IP20 types can be connected to solid wires only.

Push-ON LED Illuminated Pushlock Pull/Turn Reset (Connector)

Shape	Illumination	Rated Voltage	NC Main Contact	NO Monitor Contact	Part No.
ø40mm Mushroom	LED	24V AC/DC	3NC	—	XW1E-TV403Q4VR-BC

- The operator color is red only.
- Push-ON is illuminated when the operator is latched, and turns off when reset.

See D-036 for applicable connectors.

APEM
Switches & Pilot Lights
Control Boxes
Emergency Stop Switches
Enabling Switches
Safety Products
Explosion Proof
Terminal Blocks
Relays & Sockets
Circuit Protectors
Power Supplies
LED Illumination
Controllers
Operator Interfaces
Sensors
AUTO-ID
X6
XA
XW
XN
SEMI

Dimensions (Non-Illuminated)

Screw Terminal (IP20)

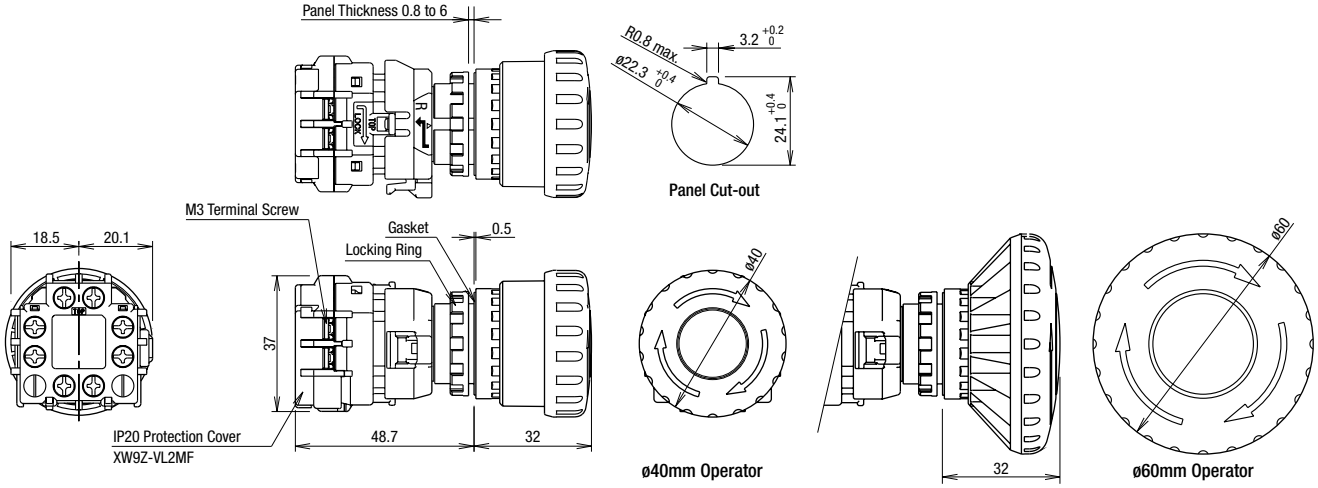

Screw Terminal (w/terminal cover)

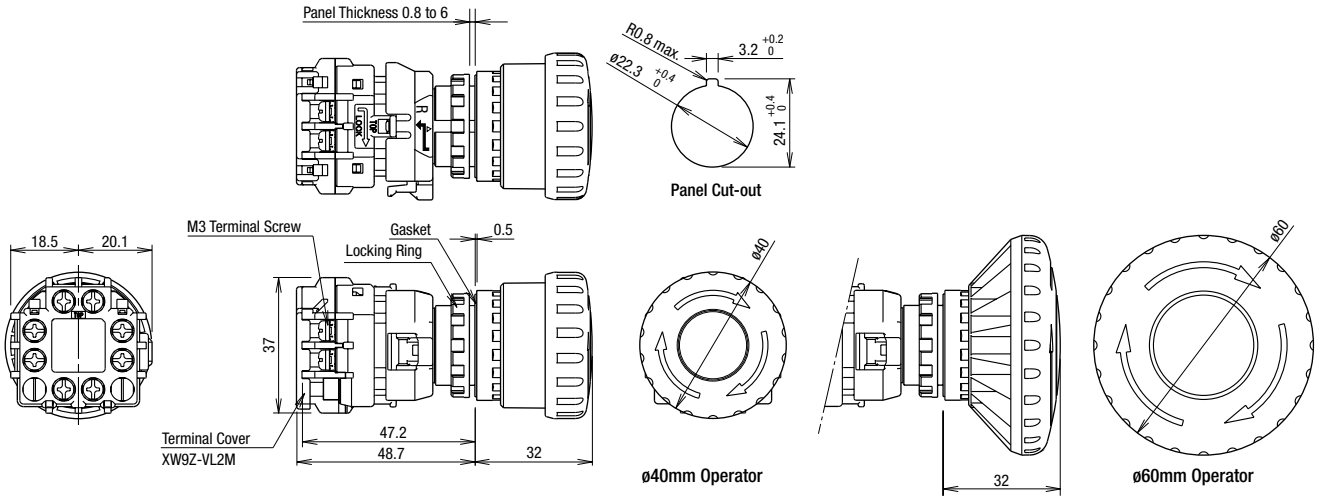

Solder Terminal and PC Board Terminal

ø40mm Operator

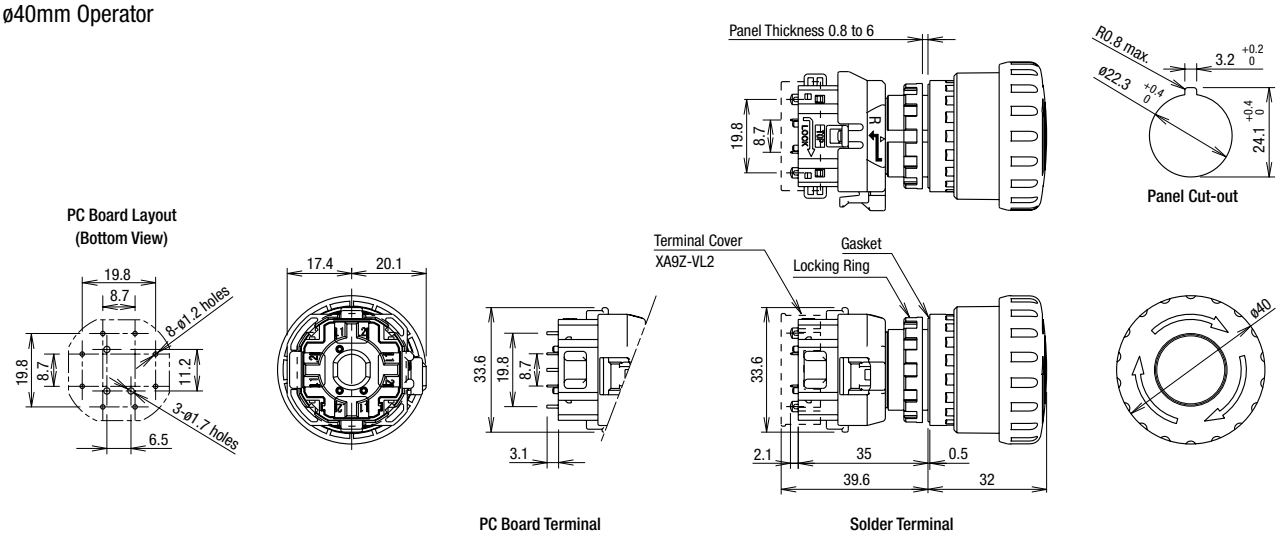

All dimensions in mm.

IDEC

Dimensions (Illuminated)

Screw Terminal (IP20) LED Illuminated

ø40mm Operator

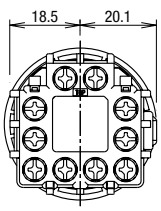

LED Push-ON

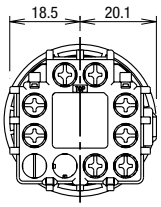

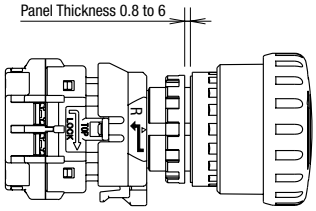

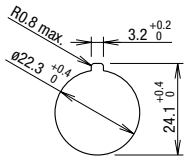

Panel Cut-out

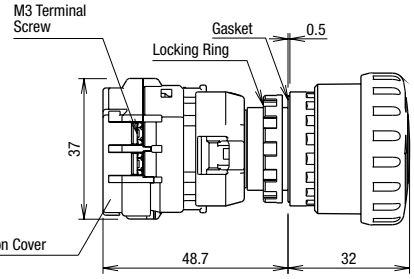

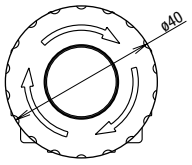

Screw Terminal (w/terminal cover)

LED Illuminated

ø40mm Operator

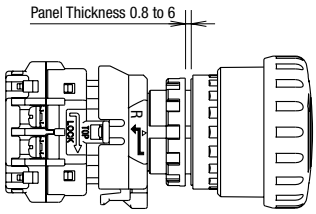

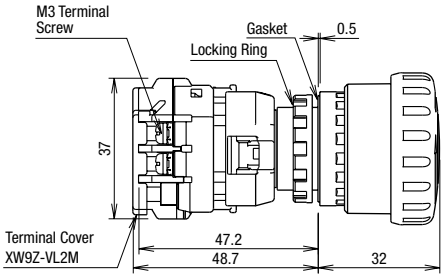

Solder Terminal and PC Board Terminal LED Illuminated

ø40mm Operator

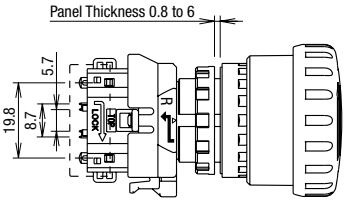

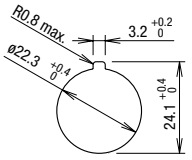

Panel Cut-out

PC Board Layout (Bottom View)

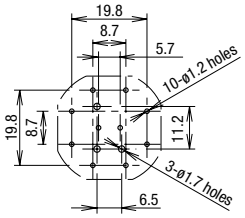

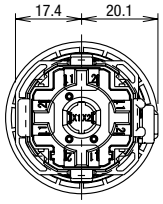

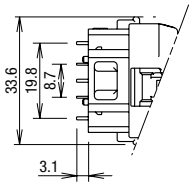

PC Board Terminal

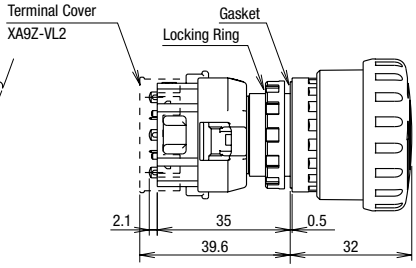

Solder Terminal

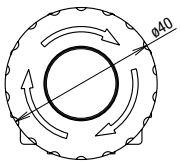

Dimensions (Connector Style)

Non-illuminated / LED Push-ON

ø40mm Operator

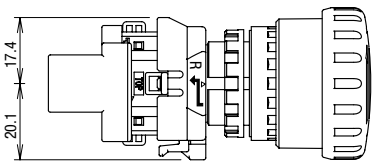

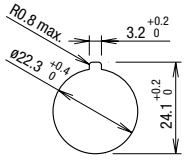

Panel Cut-out

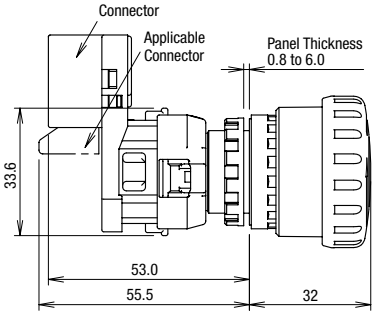

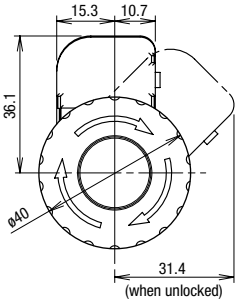

For applicable connectors, see D-036.

All dimensions in mm.

ø22 XW Series Emergency Stop Switches

Mounting Hole Layout

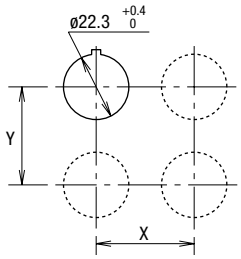

	X	Y
Screw Terminal	70 mm minimum	
Solder/PC Board Terminal	50 mm minimum	
Connector Style	50 mm minimum	70 mm minimum

- The values shown above are the minimum dimensions for mounting with other ø22mm pushbuttons. For other control units of different sizes and styles, determine the values according to the dimensions, operation, and wiring convenience.

LED Internal Circuit

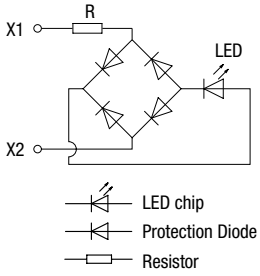

Terminal Arrangement (Bottom View)

Screw Terminal Non-illuminated

NC main contacts only
NC main contacts
Terminals 1-2

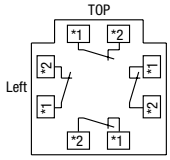

1NC: Terminals on right
2NC: Terminals on right and left
3NC: Terminals on right, left, and top

With 1NO monitor contacts
NC main contacts:
Terminals 1-2
NO monitor contacts:
Terminals 3-4

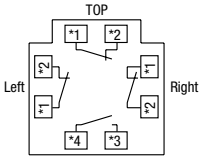

1NC: Terminals on top
2NC: Terminals on right and left

With 2NO monitor contacts
NC main contacts:
Terminals 1-2
NO monitor contacts:
Terminals 3-4

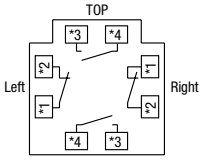

Screw Terminal Illuminated

NC main contacts only
NC main contacts:
Terminals 1-2

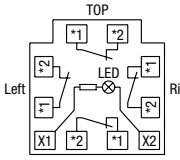

1NC: Terminals on right
2NC: Terminals on right and left
3NC: Terminals on right, left, and top

With 1NO monitor contacts
NC main contacts
Terminals 1-2
NO monitor contacts:
Terminals 3-4

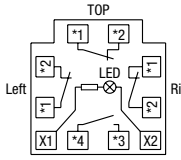

1NC: Terminals on top
2NC: Terminals on right and left

With 2NO monitor contacts
NC main contacts:
Terminals 1-2
NO monitor contacts:
Terminals 3-4

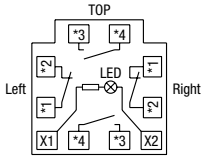

Screw Terminal Illuminated Push-ON

NC main contacts only
NC main contacts:
Terminals 1-2

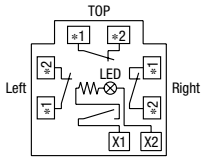

With 1NO monitor contacts
NC main contacts:
Terminals 1-2
NO monitor contacts:
Terminals 3-4

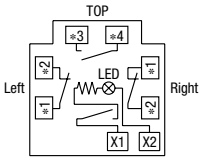

Terminal Marking Development

- Contact
  1-2: NC main contact
  3-4: NO monitor contact
- Contact Number (1-4)
  Starting with the contact of TOP side, in a counterclockwise direction.

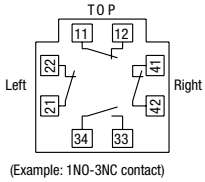

(Example: 1NO-3NC contact)

- On solder terminal and PC board terminal, the contact block is marked with contact codes (NC main contact 1-2: black, NO monitor contact 3-4: blue).

Solder Terminal / PC Board Terminal Non-illuminated

NC main contacts only
NC main contacts:
Terminals 1-2

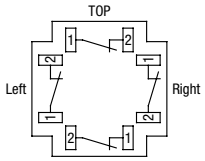

1NC: Terminals on right
2NC: Terminals on right and left
3NC: Terminals on right, left, and top

With 1NO monitor contacts
NC main contacts:
Terminals 1-2
NO monitor contacts:
Terminals 3-4

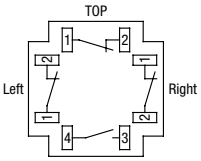

1NC: Terminals on top
2NC: Terminals on right and left

With 2NO monitor contacts
NC main contacts:
Terminals 1-2
NO monitor contacts:
Terminals 3-4

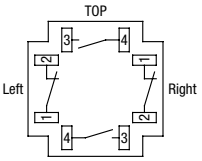

Solder Terminal only

Solder Terminal / PC Board Terminal Illuminated

NC main contacts only
NC main contacts:
Terminals 1-2

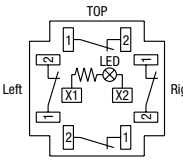

1NC: Terminals on right
2NC: Terminals on right and left
3NC: Terminals on right, left, and top

With 1NO monitor contacts
NC main contacts:
Terminals 1-2
NO monitor contacts:
Terminals 3-4

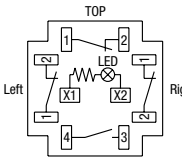

1NC: Terminals on top
2NC: Terminals on right and left

With 2NO monitor contacts
NC main contacts:
Terminals 1-2
NO monitor contacts:
Terminals 3-4

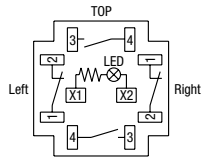

Solder Terminal only

Connector Style Non-illuminated

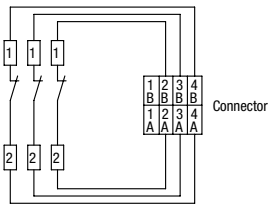

Connector Style Push-ON

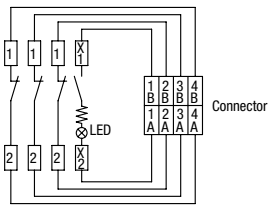

For applicable connectors, see D-036.

All dimensions in mm.

IDEC

ø22 XW Series Emergency Stop Switches (Mechanical Indicator)

High level of safety with Safe Break Action. Mechanical indicator on the operator body shows the contact status - green when NC contacts are closed - reducing the maintenance work.

- IDEC's original "Safe Break Action" and "Reverse Energy Structure" ensure the safety of operator and system, when the switch is damaged due to excessive shocks.
- The mechanical indicator on the operator body shows the normal/latched status (green: normal). Reduces maintenance work and improves operation efficiency.
- Illuminated model also available (same size as non-illuminated)
- The depth behind the panel is only 46.4 mm (w/terminal cover).
- 1 to 4NC main contacts and 1 or 2NO monitor contact
- Push-to-lock, Pull or Turn-to-reset operator
- Direct opening action mechanism (IEC 60947-5-5, 5.2, IEC 60947-5-1, Annex K)
- Safety lock mechanism (IEC 60947-5-5, 6.2)
- Degree of protection: IP65 (IEC 60529)
- Durable, gold plated silver contacts.
- Finger-safe structure (IP20)
- UL NISD category

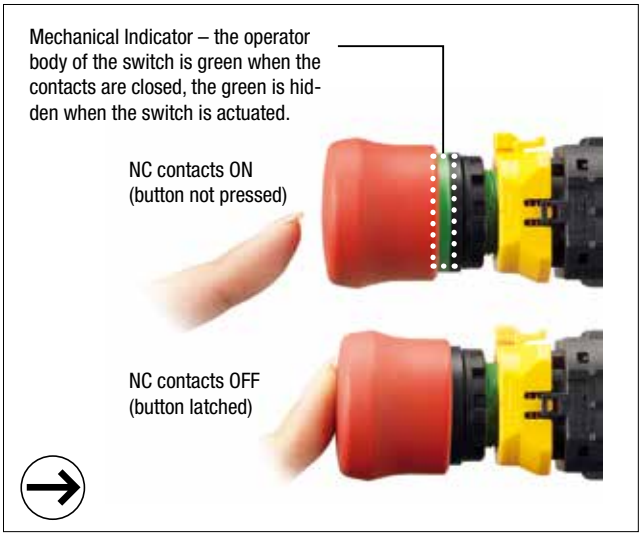

Standards and Specifications

Contact Ratings

(NC main contacts/NO monitor contact)

Rated Insulation Voltage (Ui)			Screw Terminal	250V		
Rated Thermal Current (Ith)				5A		
Rated Operating Voltage (Ue)				30V	125V	250V
Rated Operating Current	Main Contacts	AC 50/60 Hz	Resistive Load (AC-12)	–	5A	3A
			Inductive Load (AC-15)	–	3A	1.5A
		DC	Resistive Load (DC-12)	2A	0.4A	0.2A
			Inductive Load (DC-13)	1A	0.22A	0.1A
	Monitor Contacts	AC 50/60 Hz	Resistive Load (AC-12)	–	1.2A	0.6A
			Inductive Load (AC-14)	–	0.6A	0.3A
		DC	Resistive Load (DC-12)	2A	0.4A	0.2A
			Inductive Load (DC-13)	1A	0.22A	0.1A
Contact Material				Gold plated silver		

- Minimum applicable load: 5V AC/DC, 1 mA (reference value) (Operating area depends on the operating conditions and load types.)
- The rated operating currents are measured at resistive/inductive load types specified in JIS C8201-5-1.

Illumination Ratings

Rated Voltage	Operating Voltage	Rated Current
24V AC/DC	24V AC/DC ±10%	5 mA

Note: An LED lamp is built into the contact block and cannot be replaced.

Specifications

Applicable Standards	IEC60947-5-5, EN60947-5-5 JIS C8201-5-1, UL508, UL991, NFPA79, EN418 CSA C22.2 No. 14, GB14048.5
Operating Temperature	Non-illuminated: –25 to +60°C (no freezing) LED illuminated: –25 to +55°C (no freezing)
Storage Temperature	–45 to +80°C (no freezing)
Operating Humidity	45 to 85% RH (no condensation)
Operating Force	Push to lock: 32N Pull to reset: 21N Turn to reset: 0.27 N·m
Minimum Force Required for Direct Opening Action	80N
Minimum Operator Stroke Required for Direct Opening Action	4.0 mm
Maximum Operator Stroke	4.5 mm
Contact Resistance	50 mΩ maximum (initial value)
Insulation Resistance	100 MΩ minimum (500V DC megger)
Overvoltage Category	II
Impulse Withstand Voltage	2.5 kV
Pollution Degree	3
Operation Frequency	900 operations/hour
Shock Resistance	Operating extremes: 150 m/s^2 Damage limits: 1000 m/s^2
Vibration Resistance	Operating extremes:10 to 500 Hz, amplitude 0.35 mm, acceleration 50 m/s^2 Damage limits: 10 to 500 Hz, amplitude 0.35 mm, acceleration 50 m/s^2
Mechanical Life	250,000 operations minimum
Electrical Life	100,000 operations minimum 250,000 operations minimum (24V AC/DC, 100 mA)
Degree of Protection	Panel front: IP65 (IEC 60529) Terminal Protection: IP20 (screw terminal, when using XW9Z-VL2MF)
Short-circuit Protection	250V/10A fuse (Type aM, IEC60269-1/IEC60269-2)
Conditional Short-circuit Current	1000A
Terminal Style	M3 screw terminal
Recommended Tightening Torque for Locking Ring	2.0 N·m
Connectable Wire	0.75 to 1.25 mm^2 (AWG18 to 16)
Recommended Tightening Torque for Terminal Screw	0.6 to 1.0 N·m

ø22 XW Series Emergency Stop Switches (Mechanical Indicator)

Non-illuminated Pushlock Pull/Turn Reset (Screw Terminal)

Package quantity: 1

Shape	NC Main Contact	NO Monitor Contact	Part No.		Button Color Code
			IP20	w/Terminal Cover	
ø38 mushroom with mechanical indicator	1NC	—	XW1E-BV4TG01MFR	XW1E-BV4TG01MR	R (red)
	2NC	—	XW1E-BV4TG02MFR	XW1E-BV4TG02MR	
	3NC	—	XW1E-BV4TG03MFR	XW1E-BV4TG03MR	
	4NC	—	XW1E-BV4TG04MFR	XW1E-BV4TG04MR	
	1NC	1NO	XW1E-BV4TG11MFR	XW1E-BV4TG11MR	
	2NC	1NO	XW1E-BV4TG12MFR	XW1E-BV4TG12MR	
	3NC	1NO	XW1E-BV4TG13MFR	XW1E-BV4TG13MR	
	2NC	2NO	XW1E-BV4TG22MFR	XW1E-BV4TG22MR	

- Pushlock pull/turn reset switches are locked when pressed, and reset when pulled or turned clockwise.
- IP20 types can be connected to solid wires only.

Illuminated Pushlock Pull/Turn Reset (Screw Terminal)

Package quantity: 1

Shape	Illumination	Rated Voltage	NC Main Contact	NO Monitor Contact	Part No.		Button Color Code
					IP20	w/Terminal Cover	
ø38 mushroom with mechanical indicator	LED	24V AC/DC	1NC	—	XW1E-LV4TG01Q4MFR	XW1E-LV4TG01Q4MR	R (red)
			2NC	—	XW1E-LV4TG02Q4MFR	XW1E-LV4TG02Q4MR	
			3NC	—	XW1E-LV4TG03Q4MFR	XW1E-LV4TG03Q4MR	
			4NC	—	XW1E-LV4TG04Q4MFR	XW1E-LV4TG04Q4MR	
			1NC	1NO	XW1E-LV4TG11Q4MFR	XW1E-LV4TG11Q4MR	
			2NC	1NO	XW1E-LV4TG12Q4MFR	XW1E-LV4TG12Q4MR	
			3NC	1NO	XW1E-LV4TG13Q4MFR	XW1E-LV4TG13Q4MR	
			2NC	2NO	XW1E-LV4TG22Q4MFR	XW1E-LV4TG22Q4MR	

- Pushlock pull/turn reset switches are locked when pressed, and reset when pulled or turned clockwise.
- IP20 types can be connected to solid wires only.
- LED lamp is not removable.

Dimensions

Screw Terminal (IP20)

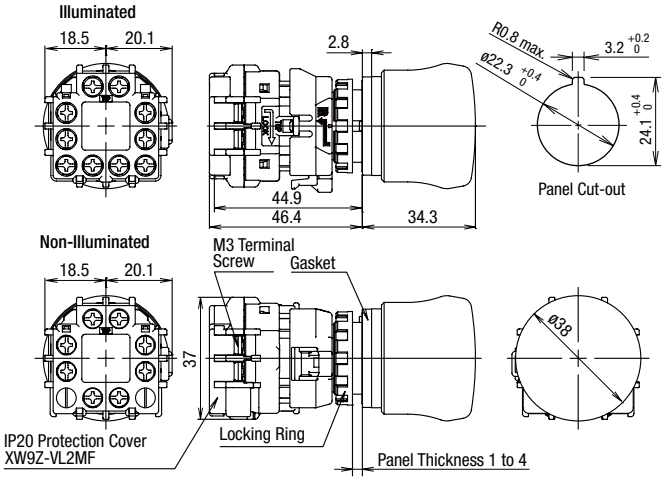

Screw Terminal (w/terminal cover)

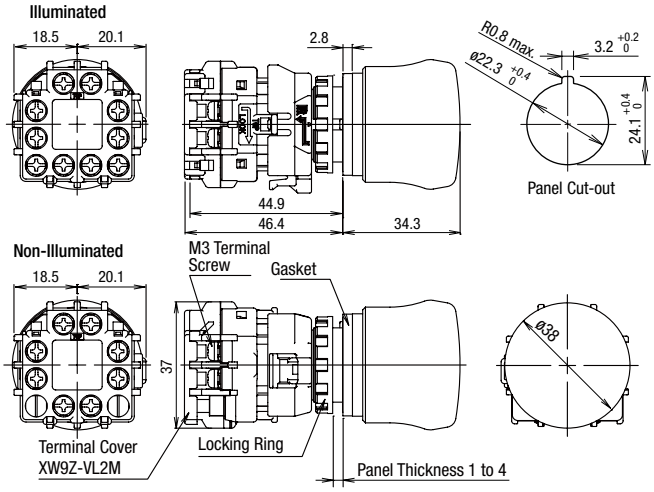

All dimensions in mm.

Mounting Hole Layout

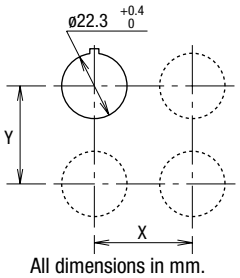

All dimensions in mm.

	X	Y
Screw Terminal	70 mm minimum	

- The values shown above are the minimum dimensions for mounting with other ø22mm emergency stop switches.
  For other emergency stop switches of different sizes and styles, determine the values according to the dimensions, operation, and wiring convenience.

LED Internal Circuit

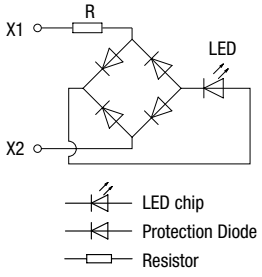

Terminal Arrangement (Bottom View)

Screw Terminal Non-illuminated

NC main contacts only
NC main contacts: Terminals 1-2

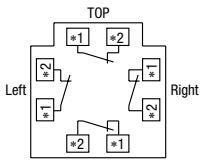

1NC: Terminals on right
2NC: Terminals on right and left
3NC: Terminals on right, left, and top

With 1NO monitor contacts
NC main contacts: Terminals 1-2
NO monitor contacts: Terminals 3-4

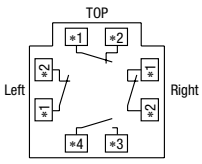

1NC: Terminals on top
2NC: Terminals on right and left

With 2NO monitor contacts
NC main contacts: Terminals 1-2
NO monitor contacts: Terminals 3-4

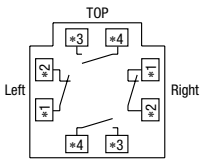

Screw Terminal Illuminated

NC main contacts only
NC main contacts: Terminals 1-2

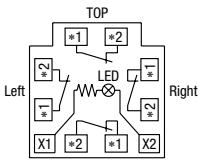

1NC: Terminals on right
2NC: Terminals on right and left
3NC: Terminals on right, left, and top

With 1NO monitor contacts
NC main contacts: Terminals 1-2
NO monitor contacts: Terminals 3-4

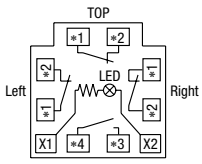

1NC: Terminals on top
2NC: Terminals on right and left

With 2NO monitor contacts
NC main contacts: Terminals 1-2
NO monitor contacts: Terminals 3-4

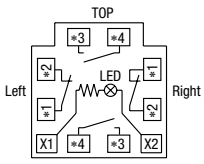

⚠ Safety Precautions

- Turn off power to the XW series emergency stop switch before starting installation, removal, wiring, maintenance, and inspection of the relays. Failure to turn power off may cause electrical shock or fire hazard.
- For wiring, use wires of the proper size to meet the voltage and current requirements. Tighten the M3 terminal screw to a tightening torque of 0.6 to 1.0 N·m. Failure to tighten the terminal screws may cause overheating and fire.

Instructions

Removing the Contact Block

First unlock the operator button. Grab the bayonet ring ① and pull back the bayonet ring until the latch pin clicks ②, then turn the contact block counterclockwise and pull out ③.

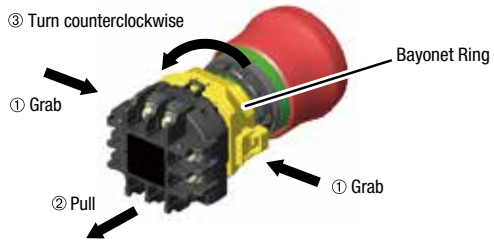

Notes for removing the contact block

1. When the contact block is removed, the monitor contact (NO contact) is closed.
2. While removing the contact block, do not exert excessive force, otherwise the switch may be damaged.
3. An LED lamp is built into the contact block for illuminated pushbuttons. When removing the contact block, pull the contact block straight to prevent damage to the LED lamp. If excessive force is exerted, the LED lamp may be damaged and fail to light.

Panel Mounting

Remove the locking ring from the operator and check that the rubber gasket is in place. Insert the operator from panel front into the panel hole. Face the side without thread on the operator with TOP marking upward, and tighten the locking ring.

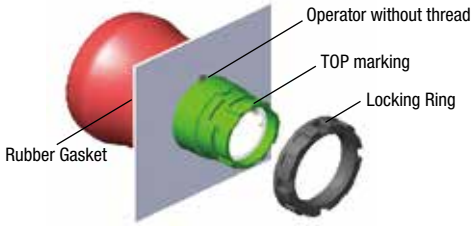

Notes for panel mounting

When mounting the operator onto a panel, use the optional locking ring wrench (MW9Z-T1) to tighten the locking ring. Tightening torque must not exceed 2.0 N·m. Do not use pliers. Excessive tightening will damage the locking ring. Use a nameplate for emergency stop switches (with anti-rotation function) when mounting onto a panel. Use an anti-rotation ring (HW9Z-RL) if a nameplate is not used. (Mechanical indicator types have a projection on the operator so an anti-rotation ring is not required.)

Installing the Contact Block

First unlock the operator button. Align the small ▼ marking on the edge of the operator with the small ▲ marking on the yellow bayonet ring. Hold the contact block, not the bayonet ring. Press the contact block onto the operator and turn the contact block clockwise until the bayonet ring clicks.

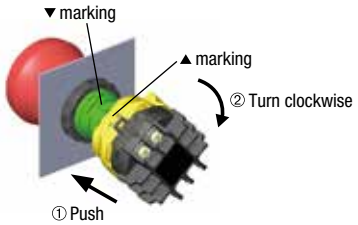

Notes for installing the contact block

Make sure that the bayonet ring is in the locked position. Check that the two projections on the bayonet ring are securely in place.

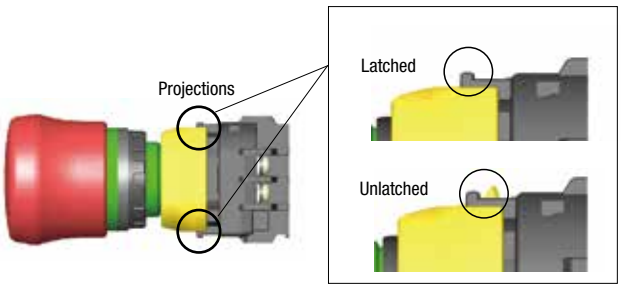

Wiring

Solder Terminal

1. The applicable wire size is 1.25 mm^2 maximum.
2. Solder the terminal at a temperature of 310 to 350°C within 3 seconds using a soldering iron. Sn-Ag-Cu type is recommended when using lead-free solder. When soldering, do not touch the enabling switch with the soldering iron. Also ensure that no tensile force is applied to the terminal. Do not bend the terminal or apply excessive force to the terminal.
3. Use a non-corrosive rosin flux.
4. Because the terminal spacing is narrow, use protective tubes or heat shrinkable tubes to avoid burning of wire coating or short circuit.

PC Board Terminal

1. When mounting a contact block on a PC board, provide sufficient rotating space for the PC board when installing and removing the contact block.
2. When mounting an XW emergency stop switch on a PC board, make sure that the operator is securely installed.
3. Do not solder by flow soldering. Otherwise, damage may be caused.

Instructions

About PC Board and Circuit Design

1. Use PC boards made of glass epoxy copper-clad laminated sheets of 1.6 mm in thickness, with double-sided through hole.
2. PC boards and circuits must withstand rated voltage and current, including the instantaneous current and voltage at switching.
3. The minimum applicable load is 5V AC/DC, 1 mA. This value may vary according to the operating environment and load.
4. Within the 2.8∗ mm areas shown in the figure below, terminals touch the PC board, resulting in possible short circuit on the printed circuit. When designing a PC board pattern, take this possibility into consideration.

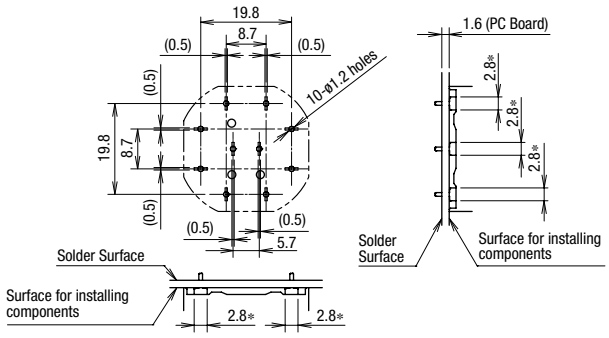

Screw Terminal

Applicable Crimping Terminals

Solid Wire

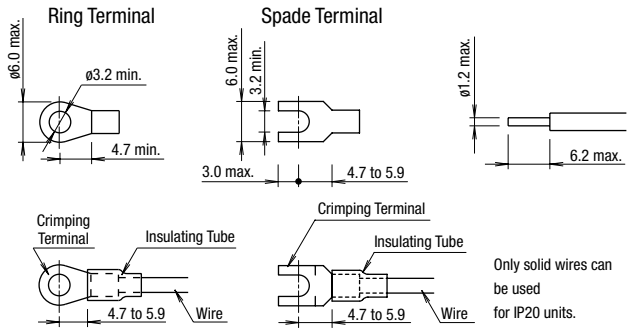

1. Wire thickness: 0.75 to 1.25 mm^2 (AWG18 to 16)
   • Be sure to install an insulating tube on the crimping terminal.
2. Tighten the M3 terminal screw to a tightening torque of 0.6 to 1.0 N·m.

Connector

1. Connector shape
   • Tyco Electronics, D-2000 series
   Part No. 1376009-1 (tab header, board mount)
2. Applicable connectors (to be supplied by user)
   • Tyco Electronics, D-2000 series
   Part No. 1-1318119-4 (receptacle housing)
   • Tyco Electronics, D-2000 series
   Part No. 1318107-1 (receptacle contact)
3. To prepare correct receptacles for the connector, read the instruction sheet and catalog of Tyco Electronics and understand the installation and wiring method.
4. Fasten the cable so that the connector is not pulled.
   Otherwise the switch may be deformed and damaged, causing malfunction or operation failure.

Installing & Removing Terminal Covers

XA9Z-VL2 (Terminal Cover for Solder Terminals)

To install the terminal cover, align the TOP marking on the terminal cover with TOP marking on the contact block, and press the terminal cover toward the contact block.

Note: For wiring, insert the wires into the holes in the terminal cover before soldering.

XW9Z-VL2M (Terminal Cover for Screw Terminals)

To install the terminal cover, align the TOP marking on the terminal cover with the TOP marking on the contact block. Place the two projections on the bottom side of the contact block into the slots in the terminal cover. Press the terminal cover toward the contact block.

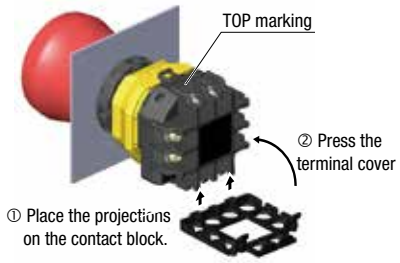

To remove the terminal cover, pull out the two latches on the top side of the terminal cover. Do not exert excessive force to the latches, otherwise the latches may break.

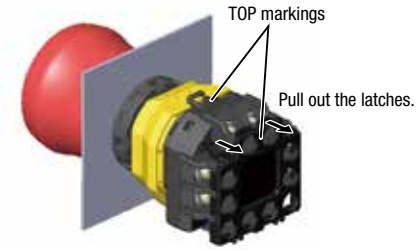

XW9Z-VL2MF (IP20 Protection Terminal Cover)

To install the IP20 protection cover, align the TOP marking on the cover with the TOP marking on the contact block, and press the cover toward the contact block.

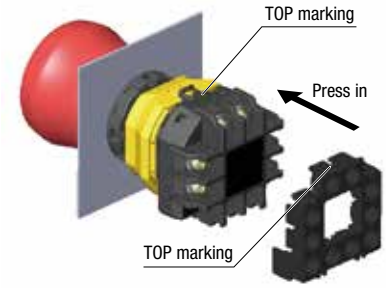

Notes:

1. Once installed, the XW9Z-VL2MF cannot be removed.
2. The XW9Z-VL2MF cannot be installed after wiring.
3. With the XW9Z-VL2MF installed, crimping terminals cannot be used. Use solid wires.
4. Make sure that the XW9Z-VL2MF is securely installed. IP20 cannot be achieved when installed loosely, and electric shocks may occur.

Instructions

Contact Bounce

When the button is reset by pulling or turning, the NC main contacts will bounce. When pressing the button, the NO monitor contacts will bounce.
When designing a control circuit, take the contact bounce time into consideration (reference value: 20 ms).

LED Illuminated Switches

An LED lamp is built into the contact block and cannot be replaced.

Installing the Anti-rotation Ring HW9Z-RL

Align the side without thread on the operator with TOP marking, the small ▲ marking on the anti-rotation ring, and the recess on the mounting panel.

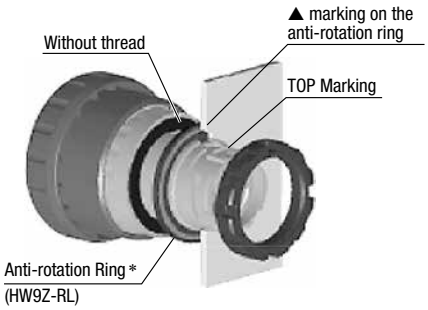

* Not required for mechanical indicator types.

Nameplate or Switch Guard

When anti-rotation is not required, remove the projection from the nameplate or switch guard using pliers. Mechanical indicator types have projections on the operator. Make sure to remove the projection on the nameplate or switch guard.

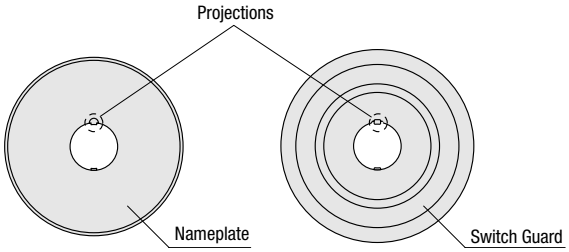

Handling

Do not expose the switch to excessive shocks and vibrations, otherwise the switch may be deformed or damaged, causing malfunction or operation failure.

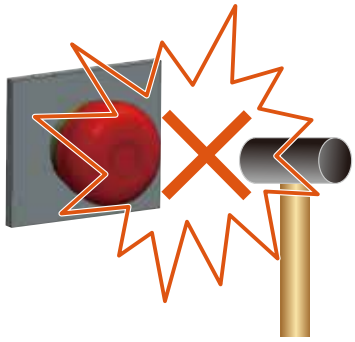

ø30 XN Series Emergency Stop Switches

ø30 mm, 4-contact Emergency Stop Switch. Padlockable and flush bezel are available.

- Padlockable, flush bezel, ø60mm jumbo mushroom, illuminated, LED push-on are available.
- IDEC's original "Safe break action" and reverse energy structure ensure the highest level of safety.
- Safety lock mechanism (IEC 60947-5-5, 6.2)
- Direct opening action mechanism (IEC 60947-5-5, 5.2, IEC60947-5-1, Annex K)
- Short depth behind the panel – only 47.7 mm for 4-contact, illuminated (flush bezel: 60.4 mm, padlockable: 61.4 mm)
- Padlockable can be locked using padlocks when latched (main contact: OFF). The rugged aluminum diecast shroud allows for installing a maximum of 20 padlocks using a hasp (total weight: 1500g maximum).
- Gold plated silver contacts.
- Red (Munsell 5R4/12) or bright red (Munsell 7.5R4.5/14) colors are available.

Standards and Specifications

Contact Ratings

NC main contacts/NO monitor contacts

Rated Insulation Voltage (Ui)				250V		
Rated Thermal Current (Ith)				5A		
Rated Operating Voltage (Ue)				30V	125V	250V
Rated Operating Current	Main Contacts	AC 50/60 Hz	Resistive Load (AC-12)	–	5A	3A
			Inductive Load (AC-15)	–	3A	1.5A
		DC	Resistive Load (DC-12)	2A	0.4A	0.2A
			Inductive Load (DC-13)	1A	0.22A	0.1A
	Monitor Contacts	AC 50/60 Hz	Resistive Load (AC-12)	–	1.2A	0.6A
			Inductive Load (AC-14)	–	0.6A	0.3A
		DC	Resistive Load (DC-12)	2A	0.4A	0.2A
			Inductive Load (DC-13)	1A	0.22A	0.1A
Contact Material				Gold plated Silver		

- Minimum applicable load: 5V AC/DC, 1 mA (reference value) (May vary depending on the operating conditions and load types.)
- The rated operating currents are measured at resistive/inductive load types specified in IEC 60947-5-1.

Illumination Ratings (LED)

Rated Voltage	Operating Voltage	Rated Current
24V AC/DC	24V AC/DC ±10%	5 mA

Note: An LED lamp is built into the contact block and cannot be replaced.

Specifications

Applicable Standards	IEC60947-5-1, EN60947-5-1 IEC60947-5-5, EN60947-5-5 JIS C8201-5-1, UL508, UL991, NFPA79 CSA C22.2 No. 14, GB14048.5
Operating Temperature	Non-illuminated: –25 to +60°C (no freezing) Illuminated: –25 to +55°C (no freezing)
Storage Temperature	–45 to +80°C
Operating Humidity	45 to 85% RH (no condensation)
Minimum Force Required for Direct Opening Action	80N
Minimum Operator Stroke Required for Direct Opening Action	4.0 mm
Maximum Operator Stroke	4.5 mm
Contact Resistance	50 mΩ maximum (initial value)
Insulation Resistance	100 MΩ minimum (500V DC megger)
Overvoltage Category	II
Impulse Withstand Voltage	2.5 kV
Pollution Degree	3
Operating Frequency	900 operations/hour
Shock Resistance	Operating extremes: 150 m/s² Damage limits: 1000 m/s²
Vibration Resistance	Operating extremes: 10 to 500 Hz, amplitude 0.35 mm, acceleration 50 m/s² Damage limits: 10 to 500 Hz, amplitude 0.35 mm, acceleration 50 m/s²
Durability (at 900 operations/h, on-duration 40%)	Mechanical: 250,000 operations minimum Electrical: 100,000 operations minimum 250,000 operations minimum (24V AC/DC, 100 mA)
Degree of Protection	Operator: IP65 (IEC60529) Terminal: IP20 (when XW9Z-VL2MF is installed)
Short-circuit Protection	250V/10A fuse (Type aM, IEC60269-1/IEC60269-2)
Conditional Short-circuit Current	1000A
Terminal Style	M3 screw terminal
Recommended Tightening Torque for Terminal Screw	0.6 to 1.0 N·m
Recommended Tightening Torque for Locking Ring	2.5 N·m
Applicable Wire Size	0.75 to 1.25 mm² (AWG18 to 16)
Total Weight of a Hasp and Padlocks	1500g maximum (padlockable)
Reinforced Insulation (IEC 60664-1)	Between live part and metal bezel (flush bezel, padlockable)
Weight	83g (XN1E-LV404Q4MR) 93g (XN1E-BV504MR) 89g (XN5E-LV404Q4MR) 120g (XN4E-LL404Q4MR)

APEM
Switches & Pilot Lights
Control Boxes
Emergency Stop Switches
Enabling Switches
Safety Products
Explosion Proof
Terminal Blocks
Relays & Sockets
Circuit Protectors
Power Supplies
LED Illumination
Controllers
Operator Interfaces
Sensors
AUTO-ID
X6
XA
XW
XN
SEMI

XN Series Emergency Stop Switches

Plastic Bezel

Non-illuminated Pushlock Pull/Turn Reset (Screw Terminal)

Shape	NC Main Contact	NO Monitor Contact	Part No.		①Operator Color Code
			IP20 Fingersafe Terminal	w/Terminal Cover	
ø40mm Mushroom	1NC	—	XN1E-BV401MF①	XN1E-BV401M①	R: Red RH: Bright red
	2NC	—	XN1E-BV402MF①	XN1E-BV402M①	
	3NC	—	XN1E-BV403MF①	XN1E-BV403M①	
	4NC	—	XN1E-BV404MF①	XN1E-BV404M①	
	1NC	1NO	XN1E-BV411MF①	XN1E-BV411M①	
	2NC	1NO	XN1E-BV412MF①	XN1E-BV412M①	
	3NC	1NO	XN1E-BV413MF①	XN1E-BV413M①	
	2NC	2NO	XN1E-BV422MF①	XN1E-BV422M①	
ø60mm Jumbo Mushroom	1NC	—	XN1E-BV501MF①	XN1E-BV501M①	
	2NC	—	XN1E-BV502MF①	XN1E-BV502M①	
	3NC	—	XN1E-BV503MF①	XN1E-BV503M①	
	4NC	—	XN1E-BV504MF①	XN1E-BV504M①	
	1NC	1NO	XN1E-BV511MF①	XN1E-BV511M①	
	2NC	1NO	XN1E-BV512MF①	XN1E-BV512M①	
	3NC	1NO	XN1E-BV513MF①	XN1E-BV513M①	
	2NC	2NO	XN1E-BV522MF①	XN1E-BV522M①	

- Specify a color code in place of ① in the Part No.
- Only solid wires can be used on the IP20 fingersafe terminal switches.

Illuminated Pushlock Pull/Turn Reset (Screw Terminal)

Shape	Illumination	Rated Voltage	NC Main Contact	NO Monitor Contact	Part No.		Operator Color
					IP20 Fingersafe Terminal	w/Terminal Cover	
ø40mm Mushroom	LED	24V AC/DC	1NC	—	XN1E-LV401Q4MFR	XN1E-LV401Q4MR	Red only
			2NC	—	XN1E-LV402Q4MFR	XN1E-LV402Q4MR	
			3NC	—	XN1E-LV403Q4MFR	XN1E-LV403Q4MR	
			4NC	—	XN1E-LV404Q4MFR	XN1E-LV404Q4MR	
			1NC	1NO	XN1E-LV411Q4MFR	XN1E-LV411Q4MR	
			2NC	1NO	XN1E-LV412Q4MFR	XN1E-LV412Q4MR	
			3NC	1NO	XN1E-LV413Q4MFR	XN1E-LV413Q4MR	
			2NC	2NO	XN1E-LV422Q4MFR	XN1E-LV422Q4MR	

- Only solid wires can be used on the IP20 fingersafe terminal switches.

Illuminated Push-ON Pushlock Pull/Turn Reset (Screw Terminal)

Shape	Illumination	Rated Voltage	NC Main Contact	NO Monitor Contact	Part No.		Operator Color
					IP20 Fingersafe Terminal	w/Terminal Cover	
ø40mm Mushroom	LED	24V AC/DC	2NC	—	XN1E-TV402Q4MFR	XN1E-TV402Q4MR	Red only
			3NC	—	XN1E-TV403Q4MFR	XN1E-TV403Q4MR	
			2NC	1NO	XN1E-TV412Q4MFR	XN1E-TV412Q4MR	

- Push-ON is illuminated when the operator is latched, and turns off when reset.
- Only solid wires can be used on the IP20 fingersafe terminal switches.

Flush Bezel

Non-illuminated Pushlock Pull/Turn Reset (Screw Terminal)

Shape	NC Main Contact	NO Monitor Contact	Part No.		Operator Color Code
			IP20 Fingersafe Terminal	w/Terminal Cover	
ø40mm Mushroom	1NC	—	XN5E-BV401MF①	XN5E-BV401M①	R: Red RH: Bright red
	2NC	—	XN5E-BV402MF①	XN5E-BV402M①	
	3NC	—	XN5E-BV403MF①	XN5E-BV403M①	
	4NC	—	XN5E-BV404MF①	XN5E-BV404M①	
	1NC	1NO	XN5E-BV411MF①	XN5E-BV411M①	
	2NC	1NO	XN5E-BV412MF①	XN5E-BV412M①	
	3NC	1NO	XN5E-BV413MF①	XN5E-BV413M①	
	2NC	2NO	XN5E-BV422MF①	XN5E-BV422M①	

- Specify a color code in place of ① in the Part No.
- Only solid wires can be used on the IP20 fingersafe terminal switches.

Illuminated Pushlock Pull/Turn Reset (Screw Terminal)

Shape	Illumination	Rated Voltage	NC Main Contact	NO Monitor Contact	Part No.		Operator Color
					IP20 Fingersafe Terminal	w/Terminal Cover	
ø40mm Mushroom	LED	24V AC/DC	1NC	—	XN5E-LV401Q4MFR	XN5E-LV401Q4MR	Red only
			2NC	—	XN5E-LV402Q4MFR	XN5E-LV402Q4MR	
			3NC	—	XN5E-LV403Q4MFR	XN5E-LV403Q4MR	
			4NC	—	XN5E-LV404Q4MFR	XN5E-LV404Q4MR	
			1NC	1NO	XN5E-LV411Q4MFR	XN5E-LV411Q4MR	
			2NC	1NO	XN5E-LV412Q4MFR	XN5E-LV412Q4MR	
			3NC	1NO	XN5E-LV413Q4MFR	XN5E-LV413Q4MR	
			2NC	2NO	XN5E-LV422Q4MFR	XN5E-LV422Q4MR	

- Only solid wires can be used on the IP20 fingersafe terminal switches.

Illuminated Push-ON Pushlock Pull/Turn Reset (Screw Terminal)

Shape	Illumination	Rated Voltage	NC Main Contact	NO Monitor Contact	Part No.		Operator Color
					IP20 Fingersafe Terminal	w/Terminal Cover	
ø40mm Mushroom	LED	24V AC/DC	2NC	—	XN5E-TV402Q4MFR	XN5E-TV402Q4MR	Red only
			3NC	—	XN5E-TV403Q4MFR	XN5E-TV403Q4MR	
			2NC	1NO	XN5E-TV412Q4MFR	XN5E-TV412Q4MR	

- Push-ON is illuminated when the operator is latched, and turns off when reset.
- Only solid wires can be used on the IP20 fingersafe terminal switches.

XN Series Emergency Stop Switches

Padlockable

Non-illuminated Pushlock Turn Reset (Padlockable) (Screw Terminal)

Shape	NC Main Contact	NO Monitor Contact	Part No.		Operator Color
			IP20 Fingersafe Terminal	w/Terminal Cover	
ø44mm Mushroom	1NC	—	XN4E-BL401MFRH	XN4E-BL401MRH	Bright red only
	2NC	—	XN4E-BL402MFRH	XN4E-BL402MRH	
	3NC	—	XN4E-BL403MFRH	XN4E-BL403MRH	
	4NC	—	XN4E-BL404MFRH	XN4E-BL404MRH	
	1NC	1NO	XN4E-BL411MFRH	XN4E-BL411MRH	
	2NC	1NO	XN4E-BL412MFRH	XN4E-BL412MRH	
	3NC	1NO	XN4E-BL413MFRH	XN4E-BL413MRH	
	2NC	2NO	XN4E-BL422MFRH	XN4E-BL422MRH	

- Only solid wires can be used on the IP20 fingersafe terminal switches.
- Padlocks and hasps are not supplied with the emergency stop switches and must be ordered separately. See D-050.

Illuminated Pushlock Turn Reset (Padlockable) (Screw Terminal)

Shape	Illumination	Rated Voltage	NC Main Contact	NO Monitor Contact	Part No.		Operator Color
					IP20 Fingersafe Terminal	w/Terminal Cover	
ø44mm Mushroom	LED	24V AC/DC	1NC	—	XN4E-LL401Q4MFR	XN4E-LL401Q4MR	Red only
			2NC	—	XN4E-LL402Q4MFR	XN4E-LL402Q4MR	
			3NC	—	XN4E-LL403Q4MFR	XN4E-LL403Q4MR	
			4NC	—	XN4E-LL404Q4MFR	XN4E-LL404Q4MR	
			1NC	1NO	XN4E-LL411Q4MFR	XN4E-LL411Q4MR	
			2NC	1NO	XN4E-LL412Q4MFR	XN4E-LL412Q4MR	
			3NC	1NO	XN4E-LL413Q4MFR	XN4E-LL413Q4MR	
			2NC	2NO	XN4E-LL422Q4MFR	XN4E-LL422Q4MR	

- Only solid wires can be used on the IP20 fingersafe terminal switches.
- Padlocks and hasps are not supplied with the emergency stop switches and must be ordered separately. See D-050.

LED Push-ON Pushlock Turn Reset (Padlockable) (Screw Terminal)

Shape	Illumination	Rated Voltage	NC Main Contact	NO Monitor Contact	Part No.		Operator Color
					IP20 Fingersafe Terminal	w/Terminal Cover	
ø44mm Mushroom	LED	24V AC/DC	2NC	—	XN4E-TL402Q4MFR	XN4E-TL402Q4MR	Red only
			3NC	—	XN4E-TL403Q4MFR	XN4E-TL403Q4MR	
			2NC	1NO	XN4E-TL412Q4MFR	XN4E-TL412Q4MR	

- Push-ON is illuminated when the operator is latched, and turns off when reset.
- Only solid wires can be used on the IP20 fingersafe terminal switches.
- Padlocks and hasps are not supplied with the emergency stop switches and must be ordered separately. See D-050.

Dimensions

Plastic Bezel

Non-illuminated

IP20 Fingersafe

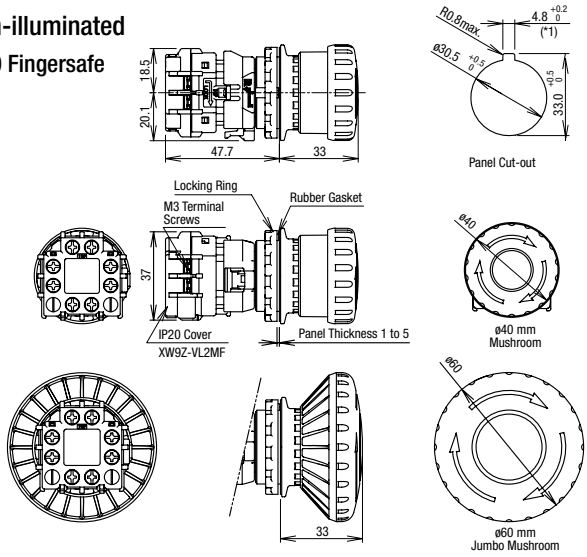

w/Terminal Cover

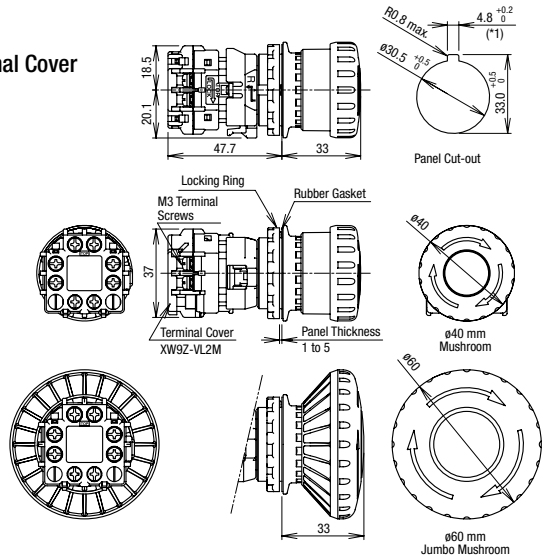

Illuminated/Push-ON

IP20 Fingersafe

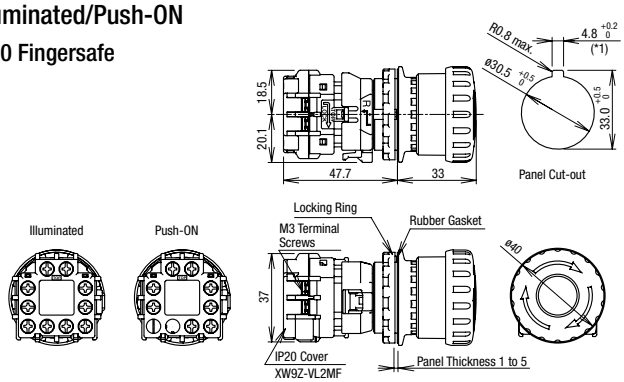

w/Terminal Cover

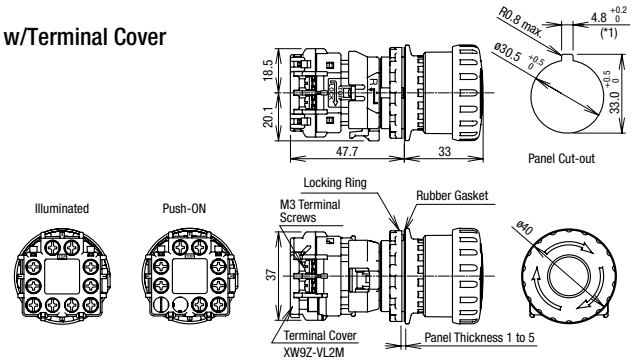

*1) Make sure that the panel cut-out is as shown in the drawing as the operator has a projection for anti-rotation.

Dimensions

Flush Bezel

Non-Illuminated

IP20 Fingersafe

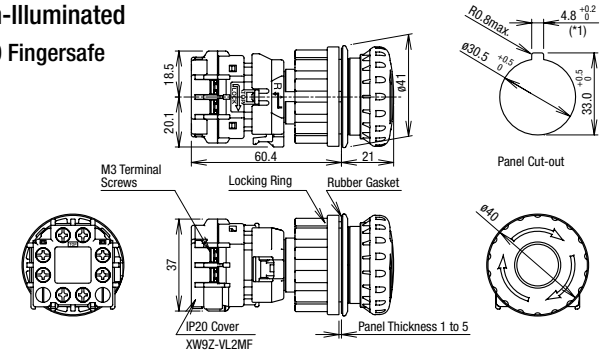

w/Terminal Cover

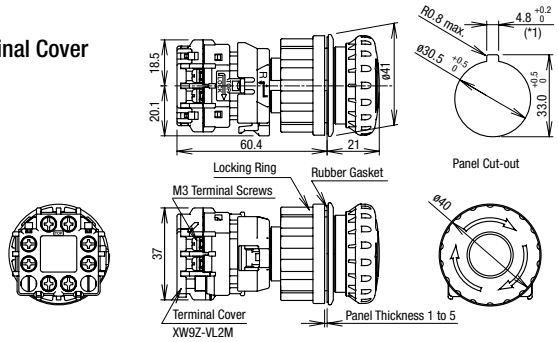

Illuminated/Push-ON

IP20 Fingersafe

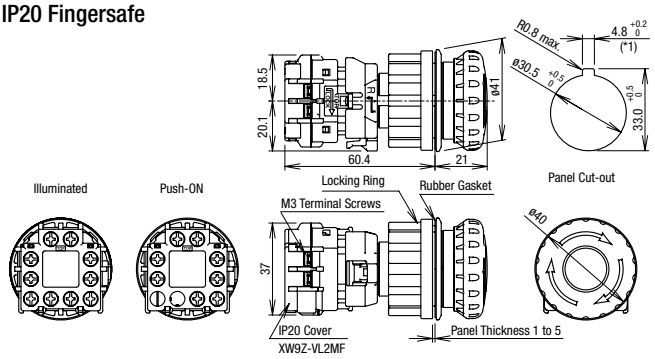

w/Terminal Cover

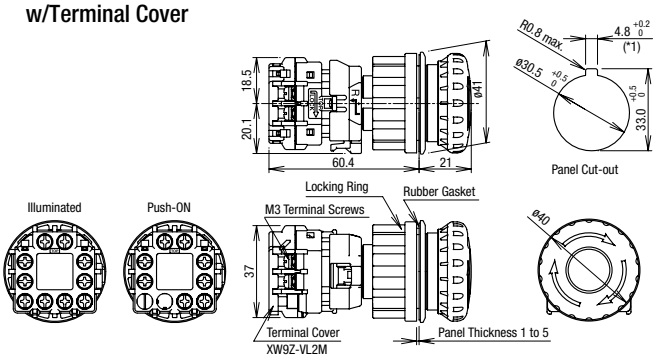

All dimensions in mm.

*1) Make sure that the panel cut-out is as shown in the drawing as the operator has a projection for anti-rotation.

IDEC

Dimensions

Padlockable

Non-Illuminated

IP20 Fingersafe

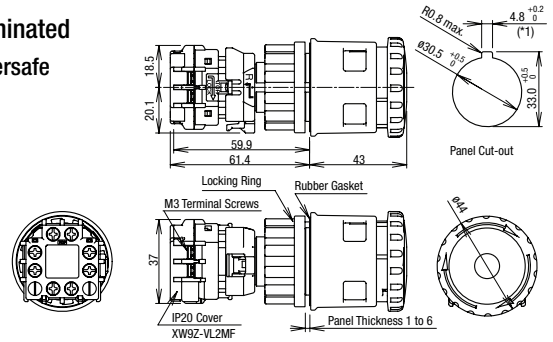

w/Terminal Cover

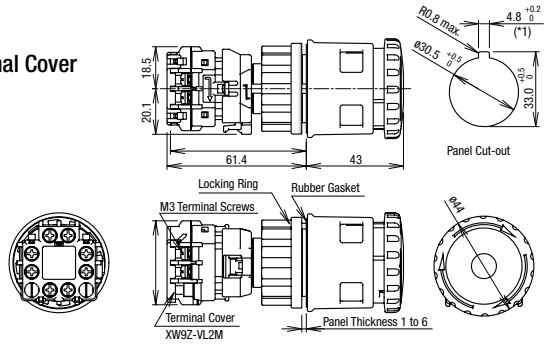

Illuminated/Push-ON

IP20 Fingersafe

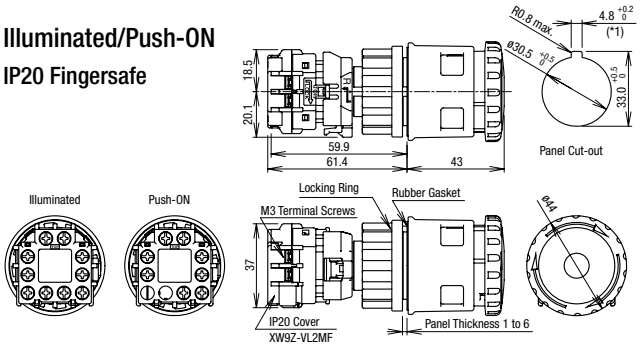

w/Terminal Cover

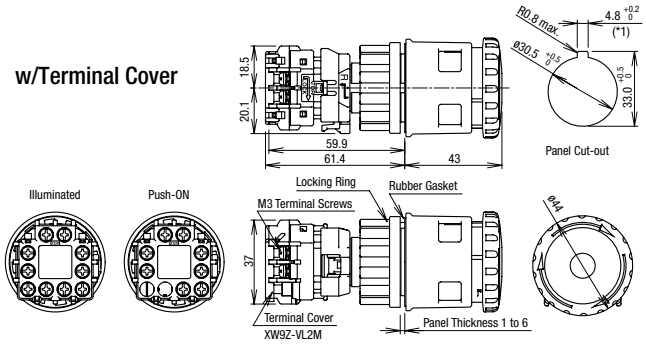

*1) Make sure that the panel cut-out is as shown in the drawing as the operator has a projection for anti-rotation.

Mounting Hole Layout

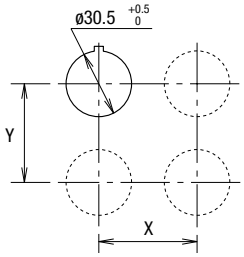

	X	Y
Plastic Bezel	70 mm minimum	
Flush Bezel		

- The values shown above are the minimum dimensions for mounting with other ø30 mm pushbuttons. For other control units of different sizes and styles, determine the values according to the dimensions, operation, and wiring convenience.
- For padlockable, determine the values according to the size and number of padlocks and hasp.

LED Unit Internal Circuit

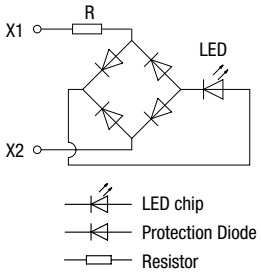

Terminal Arrangement

Terminal Arrangement (Bottom View)

Non-illuminated

NC main contacts only

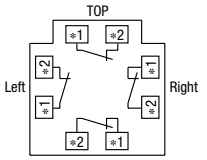

1NC: Terminals on right
2NC: Terminals on right and left
3NC: Terminals on right, left, and top

With 1NO monitor contact

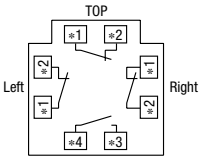

1NC: Terminals on top
2NC: Terminals on right and left

With 2NO monitor contacts

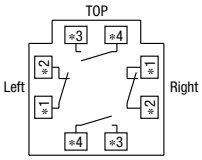

Push-ON

NC main contacts only

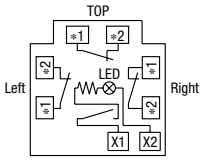

2NC: Terminals on right and left
3NC: Terminals on right, left, and top

With 1NO monitor contact

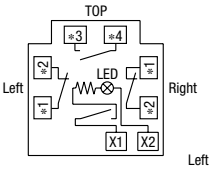

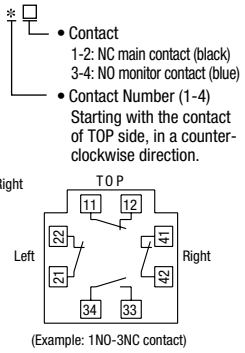

(Example: 1NO-3NC contact)

Illuminated

NC main contacts only

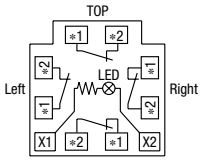

1NC: Terminals on right
2NC: Terminals on right and left
3NC: Terminals on right, left, and top

With 1NO monitor contact

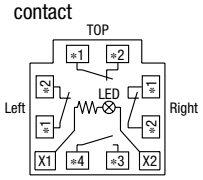

1NC: Terminals on top
2NC: Terminals on right and left

With 2NO monitor contacts

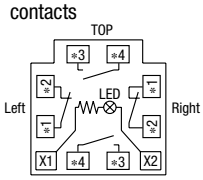

Applicable Crimping Terminal

Ring Terminal

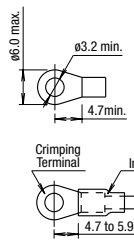

Spade Terminal

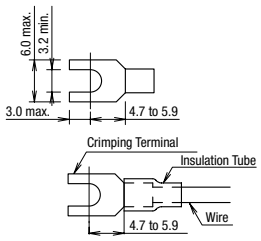

• Be sure to install an insulating tube on the crimping terminal.

Solid Wire

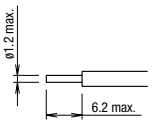

• Only solid wire can be used for IP20.

All dimensions in mm.

• See D-050 for accessories and replacement parts.

Operating Instructions

Removing the Contact Block

First unlock the operator button.
Grab the yellow bayonet ring ① and pull back the bayonet ring until the latch pin clicks ②, then turn the contact block counterclockwise and pull out ③.

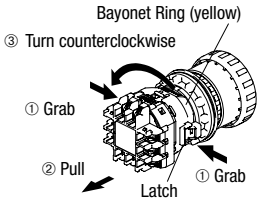

Notes for removing the contact block

1. Do not attempt to remove the contact block while the operator is latched, otherwise the switch may be damaged.
2. When the contact block is removed, the monitor contact (NO contact) is closed.
3. While removing the contact block, do not use excessive force, otherwise the switch may be damaged.
4. An LED lamp is built into the contact block for illuminated push-buttons. When removing the contact block, pull the contact block straight to prevent damage to the LED lamp. If excessive force is used, the LED lamp may be damaged and fail to light.

Panel Mounting

Remove the locking ring from the operator and check that the rubber gasket is in place. Insert the operator from panel front into the panel hole. Face the side without thread on the operator with TOP marking upward, and tighten the locking ring using ring wrench XN9Z-T1 or TWST-T1 to a torque of 2.5 N·m maximum.

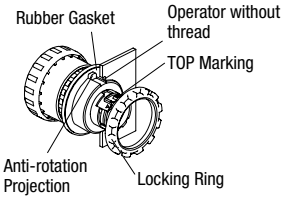

When using a nameplate
When using a nameplate HNAV-☐, break the projection from the nameplate using pliers.

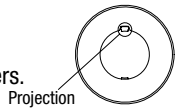

Installing the Contact Block

First unlock the operator button.
Align the small ▼ marking on the edge of the operator with the small ▲ marking on the yellow bayonet ring. Hold the contact block, not the bayonet ring. Press the contact block onto the operator and turn the contact block clockwise until the bayonet ring clicks.

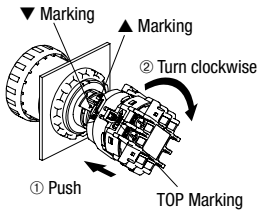

Notes for installing the contact block

1. Do not attempt to install the contact block when the operator is latched, otherwise the switch may be damaged.
2. Make sure that the bayonet ring is in the locked position.

Installing & Removing Terminal Covers

XW9Z-VL2M

To install the terminal cover, align the TOP marking on the terminal cover with the TOP marking on the contact block. Place the two projections on the bottom side of the contact block into the slots in the terminal cover. Press the terminal cover toward the contact block.

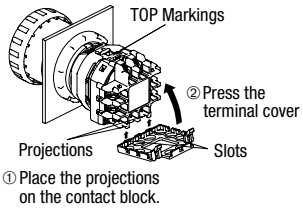

To remove the terminal cover, pull out the two latches on the top side of the terminal cover. Do not exert excessive force to the latches, otherwise the latches may break.

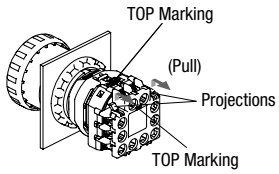

IP20 Fingersafe Terminal Cover XW9Z-VL2MF

To install the IP20 fingersafe terminal cover, align the TOP marking on the cover with the TOP marking on the contact block, and press the cover toward the contact block.

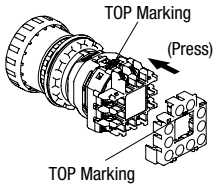

Notes:

1. Once installed, the XW9Z-VL2MF cannot be removed.
2. With the XW9Z-VL2MF installed, crimping terminals cannot be used. Use solid wires.
3. The XW9Z-VL2MF cannot be installed after wiring.
4. Make sure that the XW9Z-VL2MF is securely installed. IP20 cannot be achieved when installed loosely, and electric shocks may occur.

Notes for Operation

When using the XN emergency stop switches in safety-related part of a control system, observe safety standards and regulations of the relevant country or region. Also be sure to perform a risk assessment before operation.

Wiring

Tighten the M3 terminal screws to a torque of 0.6 to 1.0 N·m.

Contact Bounce

When the button is reset by pulling or turning, the NC main contacts will bounce. When pressing the button, the NO monitor contacts will bounce.
When designing a control circuit, take the contact bounce time into consideration (reference value: 20 ms).

LED Illuminated Switches

An LED lamp is built into the contact block and cannot be replaced.

Handling

Do not expose the switch to excessive shocks and vibrations, for example by operating the switch with tools. Otherwise the switch may be deformed or damaged, causing malfunction or operation failure.

ø16 X6/XA Series Emergency Stop Switches Accessories

Accessories and Replacement Parts (ø16 X6/XA Series Emergency Stop Switches)

Package quantity: 1

Description & Shape	Material	Part No.	Ordering No.	Package Quantity	Remarks
Ring Wrench	Metal (nickel-plated brass)	MT-001	MT-001	1	• Used to tighten the locking ring when installing the XA emergency stop switch onto a panel.
Locking Ring	Polyamide	XA9Z-LN	XA9Z-LNPN10	10	• Black
Terminal Cover	PBT	XA9Z-VL2	XA9Z-VL2PN02	2	• White • Used for solder terminals. • Also applicable to the XW series.
LED Unit	For Solder Terminal	XA9Z-LED2R	XA9Z-LED2R	1	• Replacement LED unit for illuminated (for XA series only).
	For PC Board Terminal	XA9Z-LED2VR	XA9Z-LED2VR		
LED Unit Removal Tool	Stainless Steel	MT-101	MT-101		• Used for removing the LED unit.

Nameplates (for ø16 X6/XA Emergency Stop Switches)

Package quantity: 1

Description	Legend	Part No.	Material	Plate Color	Legend Color
For ø30mm Operator	(blank)	HAAV-0	Polyamide	Yellow	Black
	EMERGENCY STOP	HAAV-27			
For ø40mm Operator	(blank)	HAAV4-0			
	EMERGENCY STOP	HAAV4-27			

• Cannot be used with a switchguard.

For ø30mm Operator

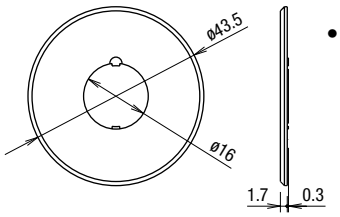

• Panel thickness when using the nameplate: 0.5 to 2 mm

For ø40mm Operator

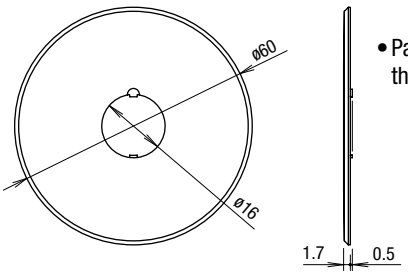

• Panel thickness when using the nameplate: 0.5 to 2 mm

All dimensions in mm.

Accessories (ø22 XW Series Emergency Stop Switches)

Description & Shape	Material	Part No.	Ordering No.	Package Quantity	Remarks
Ring Wrench	Metal (brass) (weight: approx. 150g)	MW9Z-T1	MW9Z-T1	1	• Used to tighten the locking ring when installing the XW emergency stop switch onto a panel. 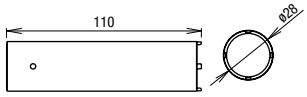
Anti-rotation Ring	Ring: Polyamide Gasket: Nitryl rubber	HW9Z-RL	HW9Z-RLPN10	10	• The anti-rotation ring is used for preventing the operator from turning. 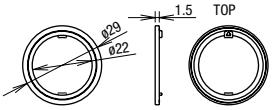
Terminal Cover	PBT	XA9Z-VL2	XA9Z-VL2PN02	2	• White • Used for solder terminals.
Terminal Cover	PPE	XW9Z-VL2M	XW9Z-VL2MPN02	2	• Black • Used for screw terminals. • Attached to IP20 protection cover units.
IP20 Protection Cover	Polyamide	XW9Z-VL2MF	XW9Z-VL2MFPN02	2	• Black • Used on terminals for IP20 finger protection. • Only solid wires can be used. • The IP20 protection cover cannot be removed once installed.
Ring Adapter	Rubber on metal base	XW9Z-A30E	XW9Z-A30EPN02	2	• Yellow panel surface • Used for installing XW1E emergency stop switches in ø30mm mounting hole. • Can be used for XW1E emergency stop switches only. • IP65 protection. • Cannot be used with nameplates. Panel thickness when mounted: 0.8 to 3.0 mm 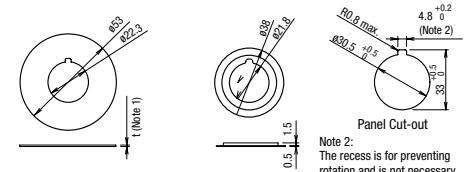 Adaper Washer ∗ (∗: A or B) Adapter Gasket Note 1: Adapter washer thickness (t) A = 1.2 mm B = 0.8 mm • Panel Mounting 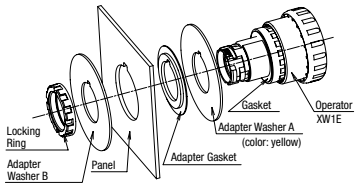

Notes:
- XW emergency stop switches of screw terminal are provided with a terminal cover.
- All dimensions in mm.

ø22 XW Series Emergency Stop Switches Accessories

Nameplate (for ø22 Emergency Stop Switches)

Description	Legend	Part No.	Ordering No.	Package Quantity	Material	Plate Color	Legend Color
For ø40mm Operator	(blank)	HWAV-0-Y	HWAV-0-Y	1	Polyamide	Yellow	Black
	EMERGENCY STOP	HWAV-27-Y	HWAV-27-Y				
For ø60mm Operator	(blank)	HWAV5-0	HWAV5-0		PBT		
	EMERGENCY STOP	HWAV5-27	HWAV5-27				
	EMERGENCY STOP	HWAV5F-27	HWAV5F-27PN10	10	PET film sticker		

Dimensions

For ø40mm Operator

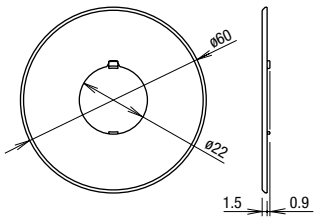

- Panel thickness when using the nameplate: 0.8 to 4.5 mm

For ø60mm Operator

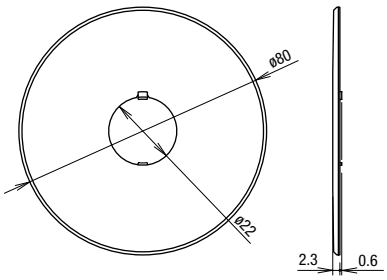

- Panel thickness when using the nameplate: 0.8 to 4 mm

Sticker Nameplate for ø60mm Operator

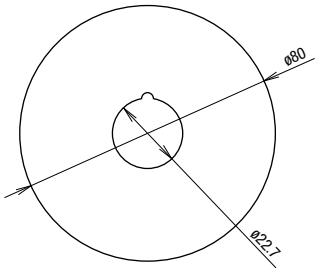

All dimensions in mm.

Maintenance Parts (for ø22 Emergency Stop Switches)

Description & Shape	Material	Part No.	Ordering No.	Package Quantity	Dimensions (mm)
Locking Ring ø28.4 H5 M22 P1	Polyamide (black)	HW9Z-LN	HW9Z-LNPN05	5	• Cannot be used on XW Series (mechanical indicator)
Washer	Nityl rubber	HW9Z-WM	HW9Z-WMPN10	10	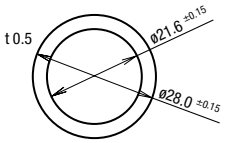
Locking Ring ø27.8 t=5.0	Polyamide	CW9Z-LN	CW9Z-LNPN05	5	• For use on XW Series (mechanical indicator) only.

IDEC

Accessories and Replacement Parts (for ø30 XN Series Emergency Stop Switches)

Name & Shape	Material	Part No.	Ordering No.	Package Quantity	Remarks
Terminal Cover	PPE	XW9Z-VL2M	XW9Z-VL2MPN02	2	• Black • Used for screw terminals. • Attached to IP20 protection cover units.
IP20 Fingersafe Terminal Cover	Polyamide	XW9Z-VL2MF	XW9Z-VL2MFPN02	2	• Black • Used to change terminal cover to IP20 fingersafe terminal. • Only solid wires can be used. Once installed, IP20 terminal cover cannot be removed.
Ring Wrench	Brass	XN9Z-T1	XN9Z-T1	1	• Used to tighten the locking ring when installing the XN emergency stop switch onto a panel. 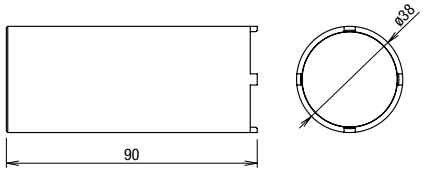
Ring Wrench	Steel Trivalent chromate plating	TWST-T1	TWST-T1	1	• Used to tighten the locking ring when installing the XN emergency stop switch onto a panel. 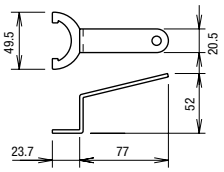

- The XN series emergency stop switches are supplied with either terminal cover or IP20 fingersafe terminal cover.
- Padlocks and hasps are not supplied and must be ordered separately.

Nameplates (for ø30 Emergency Stop Switches)

Description & Shape	Legend	Part No.	Package Quantity	Dimensions (mm)
	(blank)	HNAV-0	1	Polyamide Mounting panel thickness XN4E-☐L4: 1.0 to 4.5 mm XN☐E-☐V4: 1.0 to3.5 mm 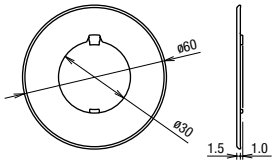
	EMERGENCY STOP	HNAV-27		

Plate color: Yellow (Munsell 2.5Y 8/10 or equivalent), Legend: Black

Padlock and Hasp

Padlocks and hasps of the following specifications can be used with padlockable emergency stop switches.

Padlock Size

a	b	c	d
7 mm maximum	19 mm minimum	39 mm minimum	15 mm minimum (Note)

Note: When the padlock is installed from the side of the bezel, dimension d requires a minimum of 6 mm. When the padlock is installed from the front of the button, dimension d requires a minimum of 15 mm.

Recommended Hasp

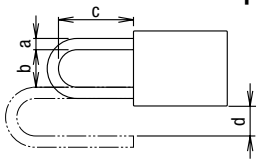

Maker	Part No.
PANDUIT CORP.	PSL-HD3 PSL-1A
Master Lock® Company LLC	420, 421

Use only padlocks or hasps that satisfy the specifications shown on the left. The maximum total weight for padlocks and hasps is 1500g.
Make sure that the total weight does not exceed 1500g, otherwise the XN emergency stop switch may be damaged.
Make sure that locking and unlocking of the padlock and hasp do not interfere with other devices.
Padlocks and hasps are available from the following manufacturers.

Manufacturer	URL
PANDUIT CORP.	http://www.panduit.com/
Master Lock® Company LLC	http://www.masterlock.com/

Emergency Stop Guard for Machinery (Protective Shroud)

If the safety requirements of ISO13850:2015 4.3.2 or 4.5 is satisfied, the switchguard can be used safely by combining IDEC's switchguard and emergency stop switch, which is approved by TÜV Rheinland in ISO13850:2015 to be used as protective shroud with emergency stop switch.

In the past, emergency stop switches with switch guards (same definition as the term "protective shroud" used in standards) could not be used on machine tools or food processing machines in compliance with ISO/IEC standards.
However, in the latest revision, the use of a protective shroud is permitted with conditions. This is because the "Prevention of unintended actuation of an emergency stop device" was added as a safety requirement and the definition of a protective shroud is as below.

> **ISO13850:2015 3.7 protective shroud (protective shroud)**
> mechanincal measure provided to reduce the possibility of unintended actuation of an emergency stop device.

Protective shroud can be used under the following conditions:

> **ISO13850:2015 4.5 Prevention of unintended acuation of an emergency stop device**
> The emergency stop device shall be designed to avoid unintended actuation.
> The actuation of the emergency stop device shall not be impaired.
> To prevent unintended actuation of the emergency stop device some precautions can be taken, e.g.:
> – locate the emergency stop device away from foreseeable heavily trafficked areas,
> – select the type of emergency stop device,
> – select appropriate size or shape of the emergency stop device, or
> – mount the emergency stop device within a recessed surface of the surrounding control panel.
>
> The use of a protective shroud around the emergency stop device should be avoided, except when necessary to prevent unintended actuation and other measures are not practicable.
>
> For emergency stop devices intended to be acutated by the hand the measures against unintended actuation shall not impede or hinder actuation with the palm of the hand, from any foreseeable position of the machine operator and others who could need to actuate them.

For details on protective shroud, see D-055.

SEMI EMO Switches

SEMI Emergency Off (EMO) Switches

ø16mm XA Series EMO Switches (Solder Terminal) (Pushlock Turn Reset Switch)

Package Quantity: 1

Shape	NC Main Contact	NO Monitor Contact	Part No.
ø40mm Mushroom	1NC	—	XA1E-BV401RH-EMO
	2NC	—	XA1E-BV402RH-EMO
	3NC	—	XA1E-BV403RH-EMO
	4NC	—	XA1E-BV404RH-EMO
	1NC	1NO	XA1E-BV411RH-EMO
	2NC	1NO	XA1E-BV412RH-EMO
	3NC	1NO	XA1E-BV413RH-EMO

- Button color is bright red (RH).
- For detailed specifications and instructions, see website.

ø22mm XW Series EMO Switch (Pushlock Turn Reset Switch)

Package Quantity: 1

Shape	NC Main Contact	NO Monitor Contact	Part No.	
			IP20 Fingersafe Terminal	w/Terminal Cover
ø40mm Mushroom	1NC	—	XW1E-BV401MFRH-EMO	XW1E-BV401MRH-EMO
	2NC	—	XW1E-BV402MFRH-EMO	XW1E-BV402MRH-EMO
	3NC	—	XW1E-BV403MFRH-EMO	XW1E-BV403MRH-EMO
	4NC	—	XW1E-BV404MFRH-EMO	XW1E-BV404MRH-EMO
	1NC	1NO	XW1E-BV411MFRH-EMO	XW1E-BV411MRH-EMO
	2NC	1NO	XW1E-BV412MFRH-EMO	XW1E-BV412MRH-EMO
	3NC	1NO	XW1E-BV413MFRH-EMO	XW1E-BV413MRH-EMO
	2NC	2NO	XW1E-BV422MFRH-EMO	XW1E-BV422MRH-EMO

- Button color is bright red (RH).
- For detailed specifications and instructions, see website.

ø22mm HW Series EMO Switches (Screw Terminal) (Pushlock Turn Reset Switch)

Package Quantity: 1

Shape	Contact Arrangement	Part No.	Button Color
ø40mm Mushroom	1NC	HW1B-V401R-EMO	Red only
	1NO-1NC	HW1B-V411R-EMO	
	2NC	HW1B-V402R-EMO	
	2NO-2NC	HW1B-V422R-EMO	

- For detailed specifications and instructions, see website

FB Series Control Stations

ø22mm HW Series EMO Switch

Package Quantity: 1

Illumination	Shape	NC Main Contact	NO Monitor Contact	Part No.	
				Without SEMI Switch Guard	With SEMI Switch Guard
Non-Illuminated	HW Series EMO Switch (Pushlock Turn Reset)	1NC	—	FB1W-HW1B-V401R-EMO-Y0	FB1W-HW1B-V401R-EMO-Y☐
		2NC	—	FB1W-HW1B-V402R-EMO-Y0	FB1W-HW1B-V402R-EMO-Y☐
		1NC	1NO	FB1W-HW1B-V411R-EMO-Y0	FB1W-HW1B-V411R-EMO-Y☐

ø22mm XW Series EMO Switch

Package Quantity: 1

Illumination	Shape	NC Main Contact	NO Monitor Contact	Part No.	
				Without SEMI Switch Guard	With SEMI Switch Guard
Non-Illuminated	ø22mm XW Series Emergency Stop Switch Pulhlock Pull/Turn Reset	1NC	—	FB1W-XW1E-BV401MRH-EMO-Y0	FB1W-XW1E-BV401MRH-EMO-Y☐
		2NC	—	FB1W-XW1E-BV402MRH-EMO-Y0	FB1W-XW1E-BV402MRH-EMO-Y☐
		3NC	—	FB1W-XW1E-BV403MRH-EMO-Y0	FB1W-XW1E-BV403MRH-EMO-Y☐
		4NC	—	FB1W-XW1E-BV404MRH-EMO-Y0	FB1W-XW1E-BV404MRH-EMO-Y☐
		1NC	1NO	FB1W-XW1E-BV411MRH-EMO-Y0	FB1W-XW1E-BV411MRH-EMO-Y☐
		2NC	1NO	FB1W-XW1E-BV412MRH-EMO-Y0	FB1W-XW1E-BV412MRH-EMO-Y☐
		3NC	1NO	FB1W-XW1E-BV413MRH-EMO-Y0	FB1W-XW1E-BV413MRH-EMO-Y☐
		2NC	2NO	FB1W-XW1E-BV422MRH-EMO-Y0	FB1W-XW1E-BV422MRH-EMO-Y☐

Note: Insert a code of SEMI switch guard in place of ☐ in Part No. (2: HW9Z-KG3, 3: HW9Z-KG4)
HW9Z-KG3 and HW9Z-KG4 are compliant with SEMI S2. See D-055 for details.

APEM
Switches & Pilot Lights
Control Boxes
Emergency Stop Switches
Enabling Switches
Safety Products
Explosion Proof
Terminal Blocks
Relays & Sockets
Circuit Protectors
Power Supplies
LED Illumination
Controllers
Operator Interfaces
Sensors
AUTO-ID
X6
XA
XW
XN
SEMI

Dimensions

ø16mm XA Series EMO Switches

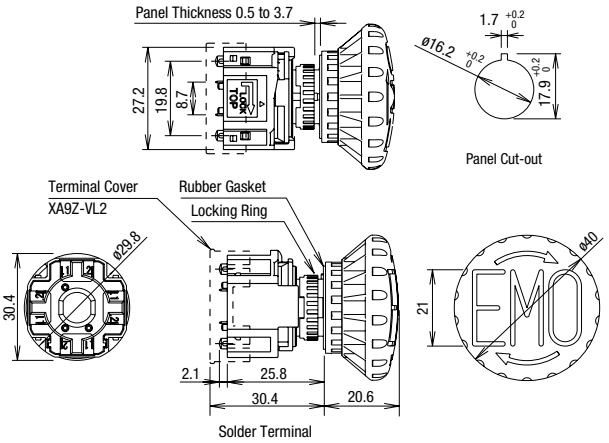

ø22mm XW Series EMO Switches

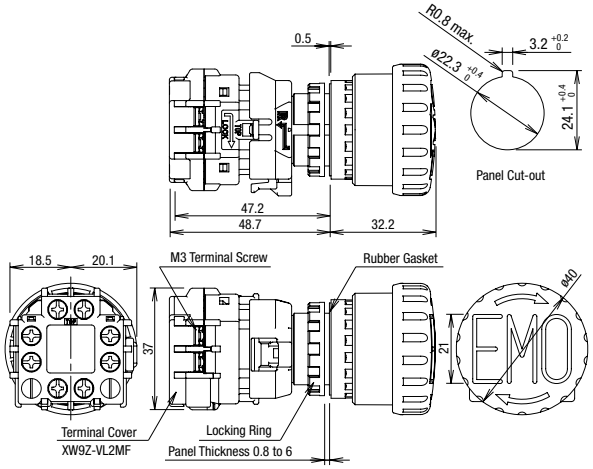

ø22mm HW Series EMO Switches

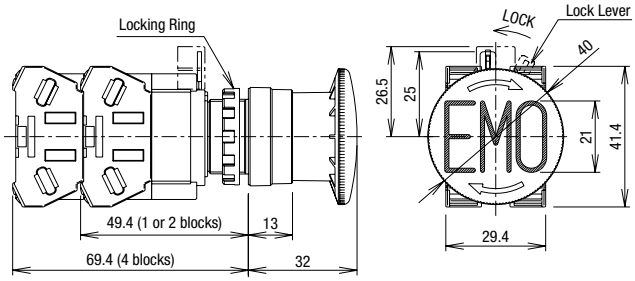

Bottom View

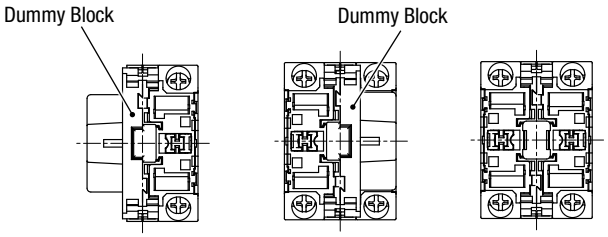

1 contact block | 3 contact blocks | 2/4 contact blocks

- For 1NC contact, the contact block will mount on the opposite side.
- See B-227 for wiring.
- Integrated terminal cover

Recommended Tightening Torque Number of Wires

Unit	Wire		Number of Wires	Recommended Tightening Torque (N·m)	Terminal Screw
HW-U Contact Block	Crimping Terminal		2	1.0 to 1.3	M3.5
	Solid Wire	ø0.5 to 1.6mm (AWG14 to 22)	2	1.0 to 1.3	
		ø1.7 to 2.0mm (AWG12)	1	1.2 to 1.3	
	Stranded Wire	0.3 to 2.0mm² (AWG14 to 22)	2	1.0 to 1.3	
		2.1 to 3.5mm² (AWG12)	1	1.2 to 1.3	

FB Series Control Box

ø22mm XW Series EMO Switches

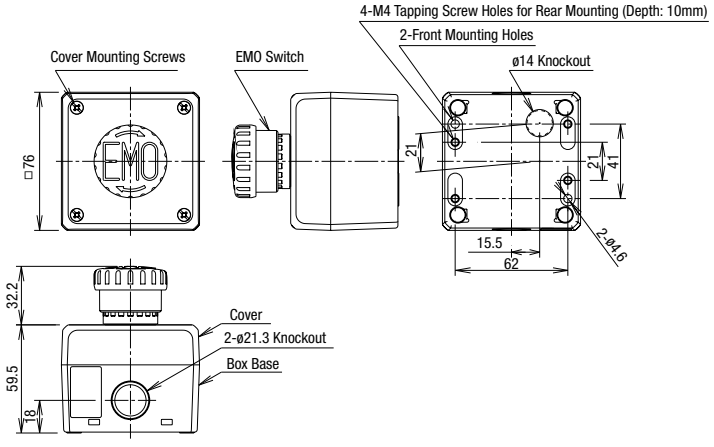

All dimensions in mm.

FB Series Control Box

ø22mm HW Series EMO Switches

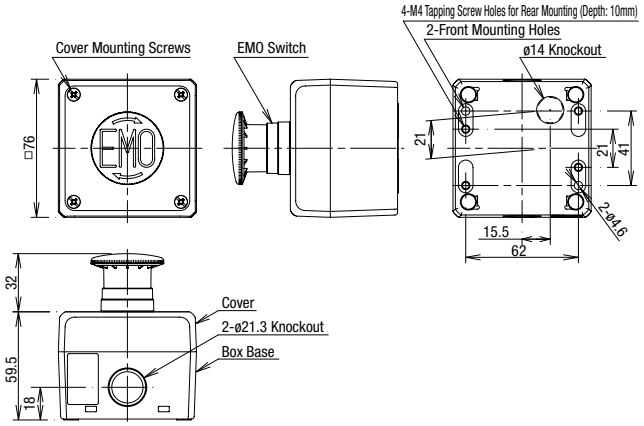

ø22mm HW Series EMO Switches + SEMI Switch Guard (HW9Z-KG3)

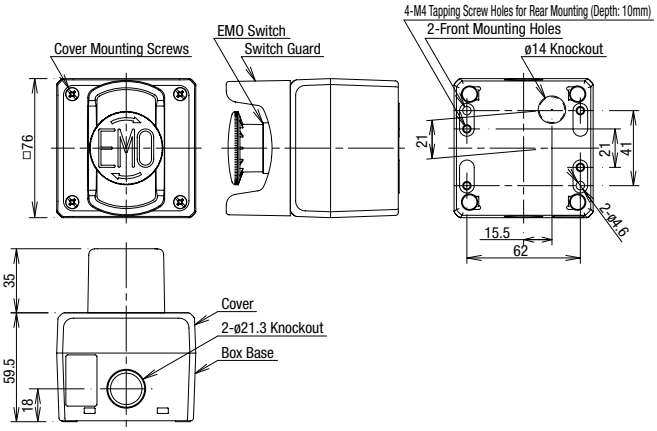

ø22mm HW Series EMO Switches + SEMI Switch Guard (HW9Z-KG4)

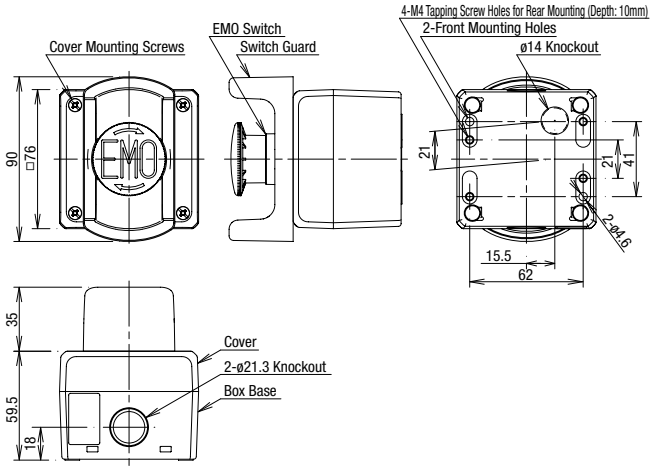

ø22mm XW Series EMO Switches + SEMI Switch Guard (HW9Z-KG3)

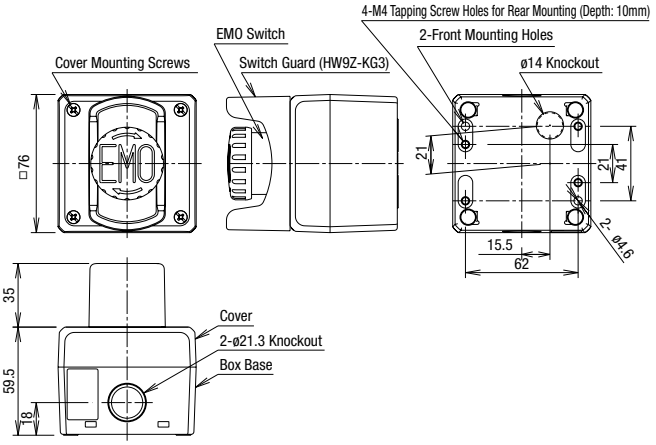

ø22mm XW Series EMO Switches + SEMI Switch Guard (HW9Z-KG4)

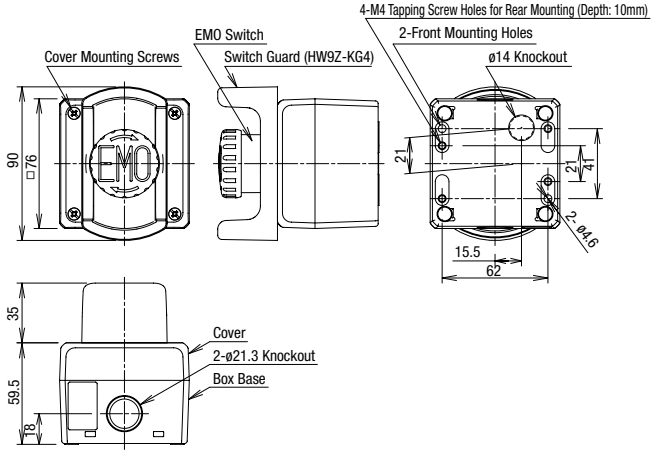

SEMI EMO Switch Guards

The combination of IDEC's EMO switch guards and emergency stop switches are approved by TÜV Rheinland for compliance with SEMI S2 standards.

SEMI S2-compliant Combinations

EMO Switch Guard	Applicable Emergency Stop Switches
XA9Z-KG1	XA1E-BV4****-EMO (①), XA1E-BV3 (②), XA1E-LV3 (③), XA1E-BV4 (③), XA1E-LV4 (③)
HW9Z-KG3	XW1E-BV4****-EMO (④), XW1E-BV4 (⑤), XW1E-LV4 (⑤), XW1E-TV4 (⑤), HW1B-V3 (⑥), HW1B-V4 (⑦),HW1B-X4 (⑧), HW1B-Y2 (⑨)
HW9Z-KG4	XW1E-BV4****-EMO (⑩), XW1E-BV4 (⑪), XW1E-LV4 (⑪), XW1E-TV4 (⑪), XW1E-BV5 (⑫) HW1B-V3 (⑬), HW1B-V4 (⑭), HW1E (⑮), HW1B-X4 (⑯), HW1B-Y2 (⑰)
HW9Z-KG5	XW1E-BV4****-EMO (⑱), XW1E-BV4 (⑲), XW1E-LV4 (⑲), XW1E-TV4 (⑲), XW1E-BV5 (⑳), HW1B-V3 (㉑),HW1B-V4 (㉒), HW1E (㉓), HW1B-X4 (㉔), HW1B-Y2 (㉕)

XA9Z-KG1

HW9Z-KG3

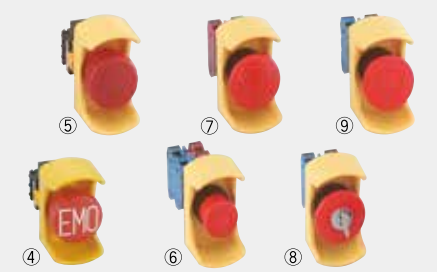

HW9Z-KG4

HW9Z-KG5

Note:
In the past, emergency stop switches with switch guards (same definition as the term "protective shroud" used in standards) could not be used on machine tools or food processing machines in compliance with ISO/IEC standards.
However, following the revision of standards in 2015, a protective shroud can now be used under certain conditions.

About SEMI

SEMI is an international industry association whose member companies produce materials, equipment, and related technology for manufacturing semiconductor, flat panel display (FPD), and micro-electromechanical systems (MEMS) products. The SEMI safety guideline was published for the semiconductor industry and it is observed with the same importance as standards.
SEMI S2-0706, 12.1 describes as follows; "The equipment should have an 'emergency off' (EMO) circuit. The EMO actuator (e.g., button), when activated, should place the equipment into a safe shutdown condition, without generating any additional hazard to personnel or the facility."
Because the semiconductor environment involves solvents and chemicals in many cases, some of which are toxic, interrupting the power source may cause secondary accidents. SEMI safety guideline requires the installation of an emergency off switch which disconnects only the part responsible for the hazardous situation, and maintains the functions of safety-related devices (e.g., smoke detectors, gas/water leak detectors, pressure measurement devices, etc.).
Emergency off buttons should be located or guarded to minimize accidental activation (SEMI S2-0706, 12.5.1). The emergency off button should be red and mushroom shaped. A yellow background for the EMO should be provided (SEMI S2-0706, 12.3).

- Location of EMO switches on semiconductor manufacturing equipment
  Acceptance criteria: controls should not be located above 1638 mm (64.5 in.) or below 838 mm (33 in.) (SEMI S8-0705, 9.1.2).
- No operation or regularly scheduled maintenance location should require more than 3 m (10 feet) travel to an EMO button (S2-0706, 12.5.2).

EMO button ←(3 m maximum)→ Operator ←(3 m maximum)→ EMO button

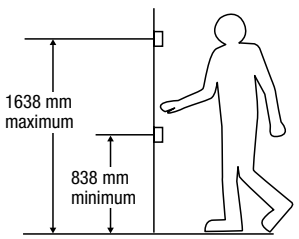

SEMI S2 Compliant Switch Guards

Switch Guards

Package Quantity: 1

Series	Description & Shape	SEMI S2	ISO 13850	Part No.	Applicable Switches (*1)	Remarks
ø16mm XA Series	ø16 mm EMO Switch Guard	○	○	XA9Z-KG1	XA1E-BV3 XA1E-BV4 XA1E-LV3 XA1E-LV4	• SEMI S2 compliant (The combination of IDEC's emergency stop switches and EMO switch guards are approved by TÜV Rheinland for compliance with SEMI S2 standard.) • ISO 13850 compliant.
ø22mm HW/XW Series	ø22 mm EMO Switch Guard	○	—	HW9Z-KG1	XW1E-BV4 XW1E-LV4 XW1E-TV4 HW1B-V3 HW1B-V4 HW1B-X4 HW1B-Y2 HW1E-BV4 HW1E-LV4	• SEMI S2-0703, 12.5.1 compliant. • Widely used switch guard in many applications.
	ø22 mm EMO Switch Guard	○	—	HW9Z-KG2	XW1E-BV4 XW1E-LV4 XW1E-TV4 HW1B-V3 HW1B-V4 HW1B-X4 HW1B-Y2 HW1E-BV4 HW1E-LV4	• SEMI S2-0703, 12.5.1 compliant. • SEMATECH Application Guide for SEMI S2-93, 12.4. compliant. • The round shape is effective to prevent inadvertent operation from any direction.
	ø22 mm EMO Switch Guard	○	○	HW9Z-KG3	XW1E-BV4 XW1E-LV4 XW1E-TV4 HW1B-V3 HW1B-V4 HW1B-X4 HW1B-Y2	• SEMI S2 compliant (The combination of IDEC's emergency stop switches and EMO switch guards are approved by TÜV Rheinland for compliance with SEMI S2 standard.) • ISO 13850 compliant. • The smallest switch guard for ø22 series switches. • Can be installed on FB control boxes.
	ø22 mm EMO Switch Guard	○	○	HW9Z-KG4	XW1E-BV4 XW1E-BV5 XW1E-LV4 XW1E-TV4 HW1B-V3 HW1B-V4 HW1B-X4 HW1B-Y2 HW1E-BV4 HW1E-LV4	• SEMI S2 compliant (The combination of IDEC's emergency stop switches and EMO switch guards are approved by TÜV Rheinland for compliance with SEMI S2 standard.) • ISO 13850 compliant. • SEMATECH Application Guide for SEMI S2-93, 12.4. compliant. • Narrower than HW9ZKG5. Saves more space. • Can be installed on FB control boxes. • Available in white.
	ø22 mm EMO Switch Guard	○	○	HW9Z-KG5	XW1E-BV4 XW1E-LV4 XW1E-TV4 XW1E-BV5 HW1B-V3 HW1B-V4 HW1B-X4 HW1B-Y2 HW1E-BV4 HW1E-LV4	• SEMI S2 compliant (The combination of IDEC's emergency stop switches and EMO switch guards are approved by TÜV Rheinland for compliance with SEMI S2 standard.) • ISO 13850 compliant. • SEMATECH Application Guide for SEMI S2-93, 12.4. compliant. • A nameplate can be installed. • Available in white.

• Material: polyamide (PA6), degree of protection: IP65 (IEC 60529)

*1) For details on applicable emergency stop switches, see D-052.

SEMI S2 Compliant Switch Guards

Dimensions

All dimensions in mm.

XA9Z-KG1

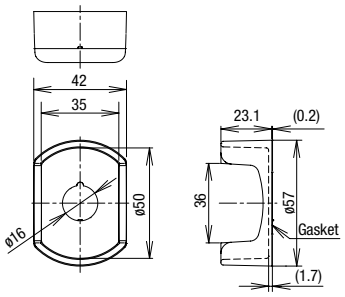

HW9Z-KG1

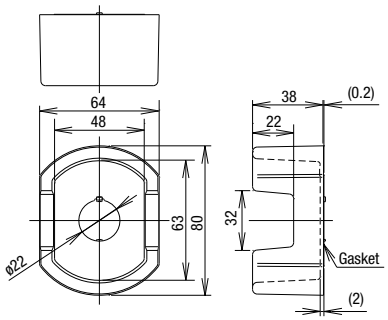

HW9Z-KG2

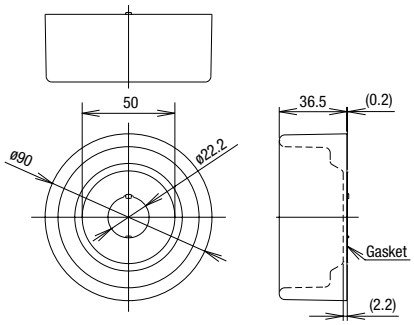

HW9Z-KG3

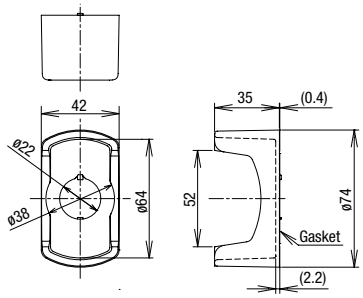

HW9Z-KG4

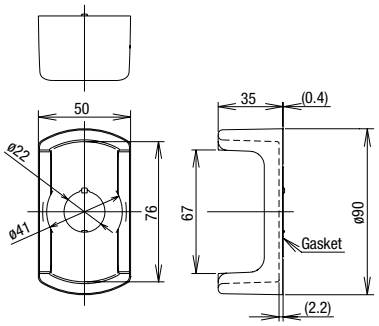

HW9Z-KG5

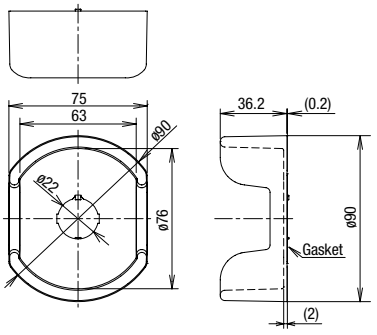

- Panel thickness: 1.2 to 4.0 mm
  (1.2 to 2.6 mm when using an HWAV nameplate)

Panel Cut-out

ø16mm

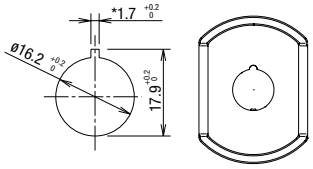

The * $1.7^{+0.2}_{0}$ recess is for preventing rotation and not necessary when anti-rotation is not used.

ø22mm

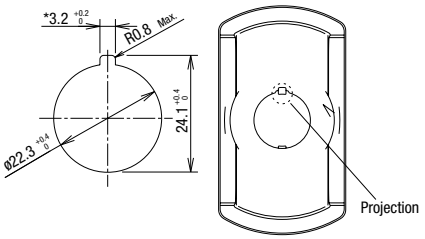

The * $3.2^{+0.2}_{0}$ recess is for preventing rotation and not necessary when anti-rotation is not used.

- When anti-rotation is not required or when the panel cut-out does not have anti-rotation recess, remove the projection using pliers.

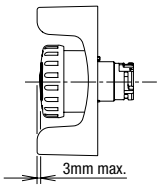

Note: The height of the applicable switch and guard will be 3 mm or less as shown in the diagram on the right.

Installation

ø16 mm

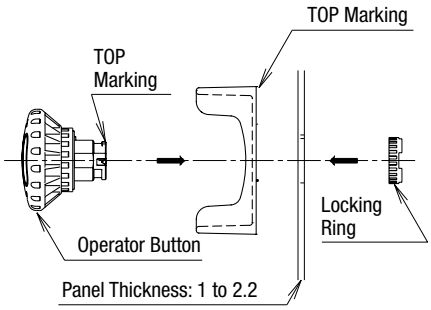

To tighten the locking ring, use locking ring wrench MT-100 and tighten to a torque of 0.88 N·m.

ø22 mm

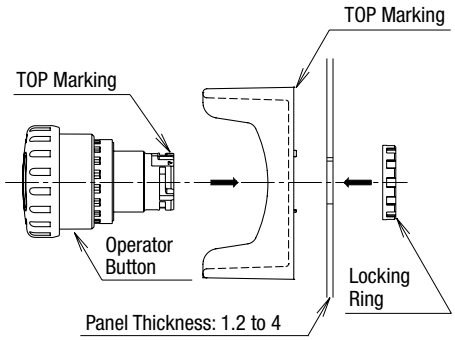

To tighten the locking ring, use locking ring wrench MW9Z-T1 and tighten to a torque of 2.0 N·m.

EMO Sticker

Part No.: HW9Z-EMO-NPP
Color: Yellow (red legend)Package
Quantity: 10

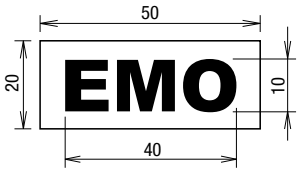

Nameplate (for ø22 mm Emergency Stop Switches)

Name	Legend	Part No.	Remarks
For ø40mm Mushroom	EMERGENCY OFF	HWAV-74-Y	• Nameplate color: yellow • Legend color: black

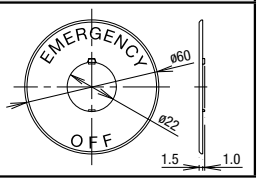

Ordering Terms and Conditions

Thank you for using IDEC Products.

By purchasing products listed in our catalogs, datasheets, and the like (hereinafter referred to as "Catalogs") you agree to be bound by these terms and conditions. Please read and agree to the terms and conditions before placing your order.

1. Notes on contents of Catalogs

(1) Rated values, performance values, and specification values of IDEC products listed in this Catalog are values acquired under respective conditions in independent testing, and do not guarantee values gained in combined conditions.
Also, durability varies depending on the usage environment and usage conditions.

(2) Reference data and reference values listed in Catalogs are for reference purposes only, and do not guarantee that the product will always operate appropriately in that range.

(3) The specifications / appearance and accessories of IDEC products listed in Catalogs are subject to change or termination of sales without notice, for improvement or other reasons.

(4) The content of Catalogs is subject to change without notice.

2. Note on applications

(1) If using IDEC products in combination with other products, confirm the applicable laws / regulations and standards.
Also, confirm that IDEC products are compatible with your systems, machines, devices, and the like by using under the actual conditions. IDEC shall bear no liability whatsoever regarding the compatibility with IDEC products.

(2) The usage examples and application examples listed in Catalogs are for reference purposes only. Therefore, when introducing a product, confirm the performance and safety of the instruments, devices, and the like before use. Furthermore, regarding these examples, IDEC does not grant license to use IDEC products to you, and IDEC offers no warranties regarding the ownership of intellectual property rights or non-infringement upon the intellectual property rights of third parties.

(3) When using IDEC products, be cautious when implementing the following.

i. Use of IDEC products with sufficient allowance for rating and performance

ii. Safety design, including redundant design and malfunction prevention design that prevents other danger and damage even in the event that an IDEC product fails

iii. Wiring and installation that ensures the IDEC product used in your system, machine, device, or the like can perform and function according to its specifications

(4) Continuing to use an IDEC product even after the performance has deteriorated can result in abnormal heat, smoke, fires, and the like due to insulation deterioration or the like. Perform periodic maintenance for IDEC products and the systems, machines, devices, and the like in which they are used.

(5) IDEC products are developed and manufactured as general-purpose products for general industrial products. They are not intended for use in the following applications, and in the event that you use an IDEC product for these applications, unless otherwise agreed upon between you and IDEC, IDEC shall provide no guarantees whatsoever regarding IDEC products.

i. Use in applications that require a high degree of safety, including nuclear power control equipment, transportation equipment (railroads / airplanes / ships / vehicles / vehicle instruments, etc.), equipment for use in outer space, elevating equipment, medical instruments, safety devices, or any other equipment, instruments, or the like that could endanger life or human health

ii. Use in applications that require a high degree of reliability, such as provision systems for gas / waterworks / electricity, etc., systems that operate continuously for 24 hours, and settlement systems

iii. Use in applications where the product may be handled or used deviating from the specifications or conditions / environment listed in the Catalogs, such as equipment used outdoors or applications in environments subject to chemical pollution or electromagnetic interference
If you would like to use IDEC products in the above applications, be sure to consult with an IDEC sales representative.

3. Inspections

We ask that you implement inspections for IDEC products you purchase without delay, as well as thoroughly keep in mind management/maintenance regarding handling of the product before and during the inspection.

4. Warranty

(1) Warranty period

The warranty period for IDEC products shall be one (1) year after purchase or delivery to the specified location. However, this shall not apply in cases where there is a different specification in the Catalogs or there is another agreement in place between you and IDEC.

(2) Warranty scope

Should a failure occur in an IDEC product during the above warranty period for reasons attributable to IDEC, then IDEC shall replace or repair that product, free of charge, at the purchase location / delivery location of the product, or an IDEC service base. However, failures caused by the following reasons shall be deemed outside the scope of this warranty.

i. The product was handled or used deviating from the conditions / environment listed in the Catalogs

ii. The failure was caused by reasons other than an IDEC product

iii. Modification or repair was performed by a party other than IDEC

iv. The failure was caused by a software program of a party other than IDEC

v. The product was used outside of its original purpose

vi. Replacement of maintenance parts, installation of accessories, or the like was not performed properly in accordance with the user's manual and Catalogs

vii. The failure could not have been predicted with the scientific and technical standards at the time when the product was shipped from IDEC

viii. The failure was due to other causes not attributable to IDEC (including cases of force majeure such as natural disasters and other disasters)

Furthermore, the warranty described here refers to a warranty on the IDEC product as a unit, and damages induced by the failure of an IDEC product are excluded from this warranty.

5. Limitation of liability

The warranty listed in this Agreement is the full and complete warranty for IDEC products, and IDEC shall bear no liability whatsoever regarding special damages, indirect damages, incidental damages, or passive damages that occurred due to an IDEC product.

6. Service scope

The prices of IDEC products do not include the cost of services, such as dispatching technicians. Therefore, separate fees are required in the following cases.

(1) Instructions for installation / adjustment and accompaniment at test operation (including creating application software and testing operation, etc.)

(2) Maintenance inspections, adjustments, and repairs

(3) Technical instructions and technical training

(4) Product tests or inspections specified by you

The above content assumes transactions and usage within your region. Please consult with an IDEC sales representative regarding transactions and usage outside of your region. Also, IDEC provides no guarantees whatsoever regarding IDEC products sold outside your region.

IDEC CORPORATION

Head Office 6-64, Nishi-Miyahara-2-Chome, Yodogawa-ku, Osaka 532-0004, Japan

www.idec.com

USA	IDEC Corporation	**Singapore**	IDEC Izumi Asia Pte. Ltd.	**China**	IDEC (Shanghai) Corporation	**Japan**	IDEC Corporation
EMEA	APEM SAS	**Thailand**	IDEC Asia (Thailand) Co., Ltd.		IDEC Izumi (H.K.) Co., Ltd.		
		India	IDEC Controls India Private Ltd.	**Taiwan**	IDEC Taiwan Corporation		

Specifications and other descriptions in this brochure are subject to change without notice.

2023 IDEC Corporation, All Rights Reserved.

IDEC