DAIKIN

AKZ9W Series — Circulating type

AKJ9W Series — Immersion type

Uses R410 refrigerant

WATER-COOLED CONDENSER TYPE

OIL COOLING UNIT

Exhaust-heat-free system for improved work environment and time-savings.

INDEX

DAIKIN INDUSTRIES, LTD.

Oil Hydraulic Division

Oil Hydraulic Equipment

AKZ9W For cooling oil | Circulating type |

Overview/Features

Oil Cooling Unit minimizes thermal displacement in the machine.

This oil cooling unit controls the temperature of various types of oil, improving the peripheral cooling of built-in motors and internal cooling of gear boxes, while also reducing hydraulic oil temperature (viscosity) controls.

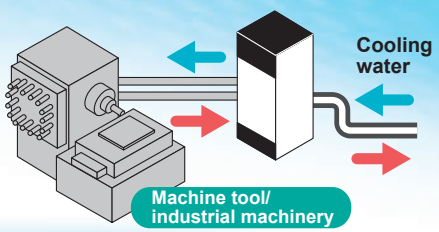

Highly accurate temperature control through inverter controlled compressor

The oil temperature can be controlled within ±0.1°C over the entire cooling load range (from 0 to 100% load) improving the accuracy of the machine tool.

The water-cooled condenser type oil cooling units are "exhaust heat free". *Excluding exhaust heat from electrical parts.

The exhaust heat from the oil cooling unit is removed by cooling water.
*Please prepare cooling water that meets water quality standards.

Little to no "exhaust heat" from the oil cooling unit.

*Excluding exhaust heat from electrical parts.

- Enables work in a comfortable environment
- Realizes reduced air-conditioning load in the factory and energy savings
- Realize stable performance of machines that require precise temperature control in the factory

Comparison of oil cooling unit surface temperatures during operation

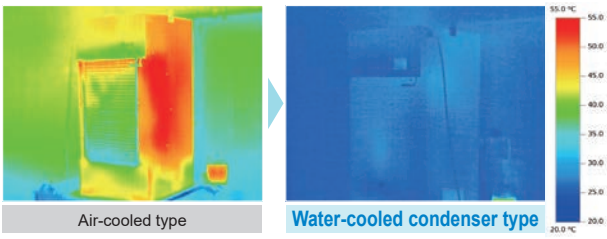

Air-cooled type | Water-cooled condenser type

Time spent cleaning a clogged condenser is greatly reduced.

- Adopted a double tube condenser, which is clog resistant
- Reliable unit for long term use

Specifications are compatible with the air-cooled units. (Cooling capacity, external dimensions, etc.)

- Easy to replace an existing air cooled condenser type unit with this water-cooled model if cooling water can be supplied to the unit.

Nomenclature

AKZ	※※	9	W	-	※※※
1	2	3	4	5	

1 Oil cooling unit identification code

AKZ: High-accuracy inverter oil cooling unit
Circulating type for cooling oil

2 Cooling capacity (kW)

14: 1.4 kW
32: 3.2 kW
43: 4.3 kW
56: 5.6 kW
90: 9.0 kW

3 Symbol of series
(Symbol to represent model change)

9: "9" Series

4 Water-cooled condenser type oil cooling unit identification codes

W: Water-cooled condenser type cooling unit

5 Symbol of option type

Options and their combinations (See the table to the right.)

Special specifications

–※※※ (3-digit number), C※※※ (3-digit number), etc. Please consult us about detailed information.

Options and their combinations

Symbol of option type	With breaker	Compliance with CE/UKCA	With heater	With tank
–B	✓	–	–	–
–C	–	✓	–	–
–H	–	–	✓	–
–T	–	–	–	✓
–BC	✓	✓	–	–
–BH	✓	–	✓	–
–BT	✓	–	–	✓
–CH	–	✓	✓	–
–CT	–	✓	–	✓
–HT	–	–	✓	✓
–BCH	✓	✓	✓	–
–BCT	✓	✓	–	✓
–BHT	✓	–	✓	✓
–CHT	–	✓	✓	✓
–BCHT	✓	✓	✓	✓

Cooling Capacity Characteristic Chart

AKZ149W

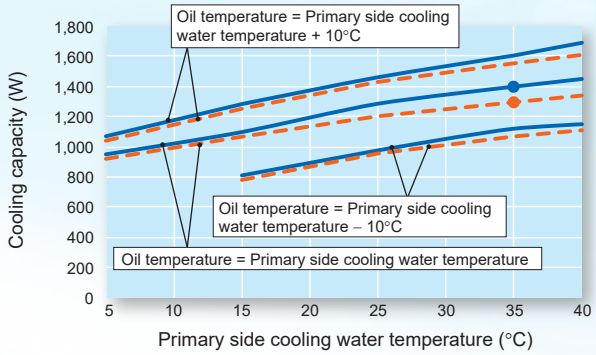

AKZ329W

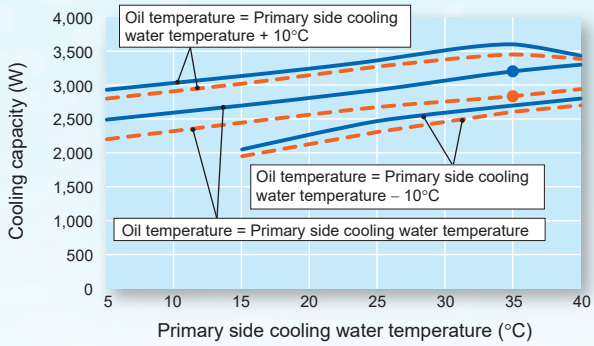

AKZ439W

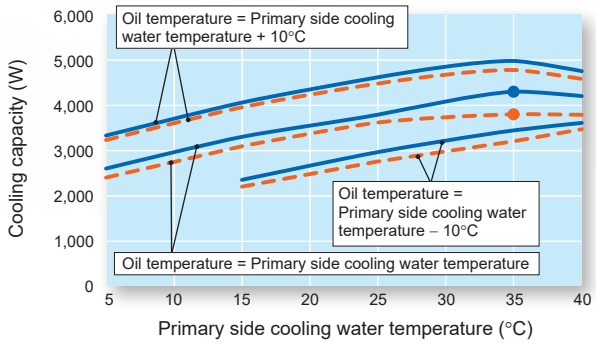

AKZ569W

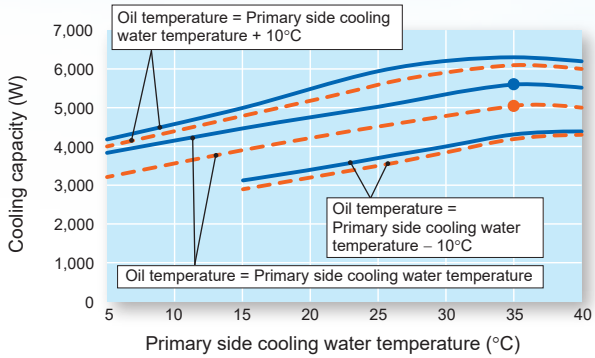

AKZ909W

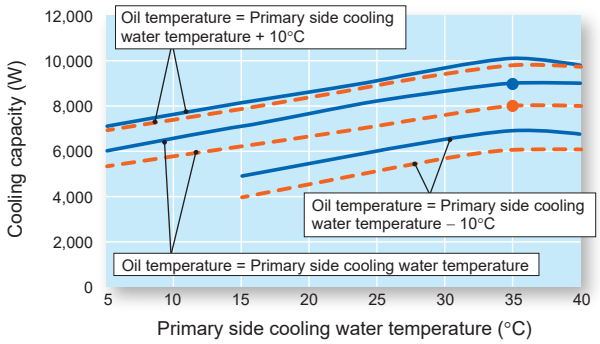

Solid line —— **When operated at 60 Hz**
Broken line - - - **When operated at 50 Hz**

1. The mark "●●" shows the standard point.
   (Primary side cooling water temperature: 35°C, rated primary side cooling water volume: see table below, inlet oil temperature: 35°C, oil used: ISO VG32, 1 atm)
2. The cooling capacity varies depending on conditions such as the primary side cooling water temperature, primary side cooling water volume, inlet oil temperature, oil dynamic viscosity and other factors

■Rated primary side cooling water volume

Model name	Rated primary side cooling water volume
AKZ149W	12 L/min
AKZ329W	18 L/min
AKZ439W	30 L/min
AKZ569W	42 L/min
AKZ909W	42 L/min

Notes on Installation and Handling

1. Request to install a water strainer

Install a strainer (20 to 40 mesh) with low pressure loss in the water piping system.

- Operation without installing a strainer at the primary side water pipe inlet will cause debris in the water piping to clog the inside of the condenser, causing unit stoppages due to abnormalities, or failure of the unit.
- Much of the debris in the water piping system adheres to the strainer during trial operation and adjustment, so please clean or replace the strainer before performing full-scale operation. In addition, please inspect and clean the strainer regularly.
- Do not use water other than that of the specified water quality when using industrial water for the primary side cooling water.

2. Water quality standards

* Use water that satisfies the following standard for tap water level.

■ **Guideline of Water Quality for Refrigeration and Air Conditioning Equipment JRA-GL-02-1994**

	Item	Chemical formula	Water quality standard	Unit
Standard items	pH	–	6.5 to 8.2	pH (25°C)
	Electrical conductivity	–	0.2 to 30	mS/m (25°C)
	Chloride ion	Cl^-	50 maximum	mg/L (ppm)
	Sulfate ion	SO_4^{2-}	50 maximum	mg/L (ppm)
	Acid consumption (pH4.8)	$CaCO_3$	50 maximum	mg/L (ppm)
	Total hardness	–	70 maximum	mg/L (ppm)
	Calcium hardness	$CaCO_3$	50 maximum	mg/L (ppm)
	Ionic silica	SiO_2	30 maximum	mg/L (ppm)
Reference items	Iron	Fe	0.3 maximum	mg/L (ppm)
	Copper	Cu	0.1 maximum	mg/L (ppm)
	Sulfide ion	S^{2-}	Not to be detected	mg/L (ppm)
	Ammonium ion	NH_4^+	0.1 maximum	mg/L (ppm)
	Residual chlorine	Cl	0.3 maximum	mg/L (ppm)
	Free carbon dioxide	CO_2	4.0 maximum	mg/L (ppm)
	Stability index	–	6.0 to 7.0	–

Specifications (AKZ149W/329W/439W)

Oil cooling unit horsepower (HP)	0.5					1.2					1.5				
Model name	AKZ149W					AKZ329W					AKZ439W				
	Standard	–B	–C	–H	–T*8	Standard	–B	–C	–H	–T*8	Standard	–B	–C	–H	–T*8
Cooling capacity (50/60 Hz)*1 kW	1.3/1.4					2.8/3.2					3.8/4.3				
Heater kW	–			1	–	–			1	–	–			1	–
Supply power*2	Three phase AC 200/200·220 V 50/60 Hz														
Circuit voltage: Main circuit															
Circuit voltage: Operating circuit	DC12/24 V														
Max. power consumption / Max. current consumption: 200 V 50 Hz	0.82 kW/3.5 A			1.29 kW/4.1 A	0.82 kW/3.5 A	1.36 kW/4.9 A			1.49 kW/4.9 A	1.36 kW/4.9 A	1.48 kW/5.4 A			1.49 kW/5.4 A	1.48 kW/5.4 A
Max. power consumption / Max. current consumption: 200 V 60 Hz	0.83 kW/3.3 A			1.32 kW/4.2 A	0.83 kW/3.3 A	1.43 kW/4.8 A			1.61 kW/5.2 A	1.43 kW/4.8 A	1.56 kW/5.3 A			1.61 kW/5.3 A	1.56 kW/5.3 A
Max. power consumption / Max. current consumption: 220 V 60 Hz	0.83 kW/3.2 A			1.43 kW/4.2 A	0.83 kW/3.2 A	1.43 kW/4.6 A			1.72 kW/5.0 A	1.43 kW/4.6 A	1.56 kW/5.0 A			1.72 kW/5.0 A	1.56 kW/5.0 A
Exterior color	Ivory white														
External dimensions (H × W × D) mm	650 × 360 × 440			950 × 360 × 440	810 × 360 × 535	775 × 360 × 440			1075 × 360 × 440	965 × 360 × 535	875 × 360 × 440			1175 × 360 × 440	1065 × 360 × 535
Compressor (Hermetic DC swing type)	Equivalent to 0.4 kW					Equivalent to 0.75 kW					Equivalent to 1.1 kW				
Evaporator	Shell-end coil type														
Condenser	Double tube type														
Fan: Motor (50/60 Hz) W	14/13.5 (for cooling heat dissipation fins)														
Oil pump: Motor	0.4 kW × 4P														
Oil pump: Theoretical discharge rate L/min	12/14.4					24/28.8									
Oil pump: Open pressure MPa	0.5					0.6									
Temperature adjust (Selectable): Synchronization type: Standard	Room temperature or machine temperature*3 (Set to "Room temperature: Mode 4" by default)														
Temperature adjust (Selectable): Synchronization type: Object to be controlled	Inlet oil temperature or outlet oil temperature (Set to inlet oil temperature by default)														
Temperature adjust (Selectable): Synchronization type: Synchronization range K	–9.9 to +9.9 against the reference temperature (Set at 0.0 by default)														
Temperature adjust (Selectable): Fixed type: Object to be controlled	Inlet oil temperature or outlet oil temperature														
Temperature adjust (Selectable): Fixed type: Range °C	5 to 50														
Refrigerant control	Rotation speed control of compressor by inverter + Opening rate control of electric expansion valve														
Refrigerant: R410A (GWP: 2090)*4: Filling amount kg	0.35					0.39					0.57				
Refrigerant: R410A (GWP: 2090)*4: CO_2 equivalent tCO2eq	0.74					0.82					1.20				
Protection equipment	Overcurrent relay (for a pump motor), reverse-phase protection device, restart prevention timer, high oil temperature protection thermistor, low oil temperature protection thermistor, relief valve (for a pump), discharge pipe temperature thermistor, condenser temperature thermistor, refrigerant leakage detector, inverter protection device, high-pressure switch, compressor thermal protector (–C type only), overheat protection temperature switch (–H type only), oil lack protection switch (–H type only), and molded-case circuit breaker (–B type only)														
Operating range: Room temperature °C	5 to 45 (inlet oil temperature ±10°C)														
Operating range: Inlet oil temperature °C	5 to 50														
Operating range: Primary side cooling water temperature °C	5 to 40 (inlet oil temperature ±10°C)														
Operating range: Primary side cooling water volume L/min	Primary side cooling water temperature 5 to within 35°C: 6 to 20 35 to 40°C: 12 to 20					Primary side cooling water temperature 5 to within 35°C: 7.5 to 40 35 to 40°C: 18 to 40					Primary side cooling water temperature 5 to within 35°C: 13 to 60 35 to 40°C: 30 to 60				
Operating range: Oil viscosity mm²/s	1.4 to 200 (ISO VG2 to 32)														
Operating range: Humidity	20 to 85% RH														
Operating range: Product external pressure loss: Discharge side	0.5 MPa maximum														
Operating range: Product external pressure loss: Suction side	–30.7 kPa or less														
Primary side cooling water internal pressure loss	0.1 MPa (12 L/min)					0.1 MPa (18 L/min)					0.1 MPa (30 L/min)				
Usable oil	Lubricating oil, mineral oil based hydraulic oil (except for phosphate ester hydraulic oil, water, water-soluble liquid, chemicals, food products, fuel, cutting fluid, grinding fluid, etc.)														
Connecting tube: Oil inlet	Rc3/4														
Connecting tube: Oil outlet	Rc3/4			Rc1 1/4	Rc3/4				Rc1 1/4	Rc3/4				Rc1 1/4	Rc3/4
Connecting tube: Oil drain	Rc1/4 (Plugged)														
Connecting tube: Cooling water inlet/outlet	Rc1/2														
Connecting tube: Cooling water drain	Rc1/4 (Plugged)														
Sound level (value equivalent to measurement in an anechoic chamber) (Front 1 m, height 1 m) db (A)	60										62				
Permissible transport vibration*5	Up and down vibration 14.7 m/s² × 2.5 hr (7.5 to 100 Hz sweep/five min.)														
Protective structure*6	IP2X														
Mass kg	61			88	78	65			92	82	71			98	88
Molded-case circuit breaker (Rated current) A	–	10	–			–	10	–			–	10	–		
Oil tank (Capacity) L	–				15	–				20	–				20
Items prepared by the customer: Earth leakage breaker (Rated current)*7 A	10														

Note: *1. The cooling capacity indicates the value at the standard point (inlet oil temperature: 35°C, primary side cooling water temperature: 35°C, rated primary side cooling water volume: see page 2, oil used: ISO VG32, 1 atm). This unit has about ±5% of product tolerance.
*2. Use a commercial power supply for the power source. The use of an inverter power supply may cause burn damage to the machine. The voltage fluctuation range should be within ±10%. If it is more than ±10%, please consult us.
*3. The optional thermistor for machine temperature synchronization is required.
*4. The refrigerant is enclosed in a sealed container. The –C type comes with the SDS (Safety Data Sheet) for refrigerant R410A.
*5. The specifications for permissible transport vibration are those of a standard unit.
*6. Electric component section ingress protection: IP54 or equivalent (However, use piping conduits etc. rated at least IP54 at wiring ports.)
*7. The earth leakage breaker is not supplied with this product. Please prepare it yourself.
*8. The yellow line on the tank oil level gauge shows the highest oil level and the red line the lowest oil level.

Specifications (AKZ569W/909W)

Oil cooling unit horsepower (HP)	2.0					3.0				
Model name	AKZ569W					AKZ909W				
	Standard	–B	–C	–H	–T*8	Standard	–B	–C	–H	–T*8
Cooling capacity (50/60 Hz)*1 kW	5.0/5.6					8.0/9.0				
Heater kW	–			2	–	–			3	–
Supply power*2	Three phase AC 200/200·220 V 50/60 Hz									
Circuit voltage: Main circuit										
Circuit voltage: Operating circuit	DC12/24 V									
Max. power consumption / Max. current consumption: 200 V 50 Hz	2.17 kW/7.5 A			2.50 kW/8.3 A	2.17 kW/7.5 A	4.15 kW/13.3 A				
200 V 60 Hz	2.25 kW/7.4 A			2.57 kW/8.0 A	2.25 kW/7.4 A	4.20 kW/13.2 A				
220 V 60 Hz	2.25 kW/7.0 A			3.00 kW/8.8 A	2.25 kW/7.0 A	4.20 kW/12.7 A				
Exterior color	Ivory white									
External dimensions (H × W × D) mm	1110 × 470 × 560			1410 × 470 × 560	1375 × 470 × 580	1220 × 560 × 680			1520 × 560 × 680	1485 × 560 × 700
Compressor (Hermetic DC swing type)	Equivalent to 1.5 kW					Equivalent to 2.2 kW				
Evaporator	Brazed plate type									
Condenser	Double tube type									
Fan: Motor (50/60 Hz) W	20/19 (for cooling heat dissipation fins)									
Oil pump: Motor	0.7 kW × 4P									
Oil pump: Theoretical discharge rate L/min	30/36									
Oil pump: Open pressure MPa	0.6									
Temperature adjust (Selectable): Synchronization type: Standard	Room temperature or machine temperature*3 (Set to "Room temperature: Mode 4" by default)									
Synchronization type: Object to be controlled	Inlet oil temperature or outlet oil temperature (Set to inlet oil temperature by default)									
Synchronization type: Synchronization range K	–9.9 to +9.9 against the reference temperature (Set at 0.0 by default)									
Fixed type: Object to be controlled	Inlet oil temperature or outlet oil temperature									
Fixed type: Range °C	5 to 50									
Refrigerant control	Rotation speed control of compressor by inverter + Opening rate control of electric expansion valve									
Refrigerant: R410A (GWP: 2090)*4: Filling amount kg	0.70					1.03				
Refrigerant: R410A (GWP: 2090)*4: CO_2 equivalent tCO2eq	1.47					2.16				
Protection equipment	Overcurrent relay (for a pump motor), reverse-phase protection device, restart prevention timer, high fluid temperature protection thermostat, low oil temperature protection thermistor, relief valve (for a pump), discharge pipe temperature thermistor, condenser temperature thermistor, refrigerant leakage detector, inverter protection device, high-pressure switch, compressor thermal protector (–C type only), overheat protection temperature switch (–H type only), oil lack protection switch (–H type only), and molded-case circuit breaker (–B type only)									
Operating range: Room temperature °C	5 to 45 (inlet oil temperature ±10°C)									
Operating range: Inlet oil temperature °C	5 to 50									
Operating range: Primary side cooling water temperature °C	5 to 40 (inlet oil temperature ±10°C)									
Operating range: Primary side cooling water volume L/min	Primary side cooling water temperature 5 to within 35°C: 13 to 60 35 to 40°C: 30 to 60					Primary side cooling water temperature 5 to within 35°C: 19 to 60 35 to 40°C: 42 to 60				
Operating range: Oil viscosity mm²/s	1.4 to 200 (ISO VG2 to 32)									
Operating range: Humidity	20 to 85% RH									
Operating range: Product external pressure loss: Discharge side	0.5 MPa maximum									
Operating range: Product external pressure loss: Suction side	–30.7 kPa or less									
Primary side cooling water internal pressure loss	0.15 MPa (42 L/min)									
Usable oil	Lubricating oil, mineral oil based hydraulic oil (except for phosphate ester hydraulic oil, water, water-soluble liquid, chemicals, food products, fuel, cutting fluid, grinding fluid, etc.)									
Connecting tube: Oil inlet	Rc1 1/4				Rc1	Rc1 1/4				Rc1
Connecting tube: Oil outlet	Rc1 1/4									
Connecting tube: Oil drain	Rc1/4 (Plugged)									
Connecting tube: Cooling water inlet/outlet	Rc3/4									
Connecting tube: Cooling water drain	Rc3/8 plugged									
Sound level (value equivalent to measurement in an anechoic chamber) (Front 1 m, height 1 m) db (A)	62					64				
Permissible transport vibration*5	Up and down vibration 14.7 m/s² × 2.5 hr (7.5 to 100 Hz sweep/five min.)									
Protective structure*6	IP2X									
Mass kg		91		109	124		107		132	142
Molded-case circuit breaker (Rated current) A	–	15		–		–	20		–	
Oil tank (Capacity) L			–		50			–		70
Items prepared by the customer: Earth leakage breaker (Rated current)*7 A	15					20				

Refer to Page 3 for explanatory notes.

Operating Temperature Range

Note: 1. The mark "◎" shows the standard point.
2. Be sure to use the unit within the range of use specified in ▭.
(Use outside the usable range significantly reduces cooling capacity. There is also a risk of moisture condensation.)

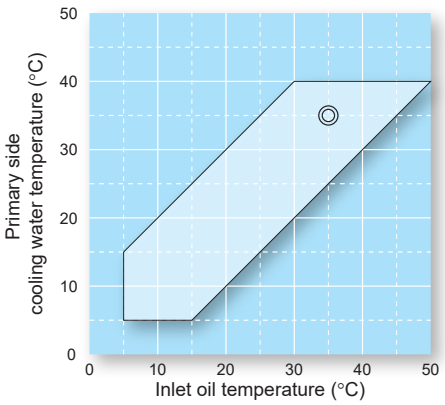

External Dimension Diagram (AKZ149W)

AKZ149W (-B, -C)

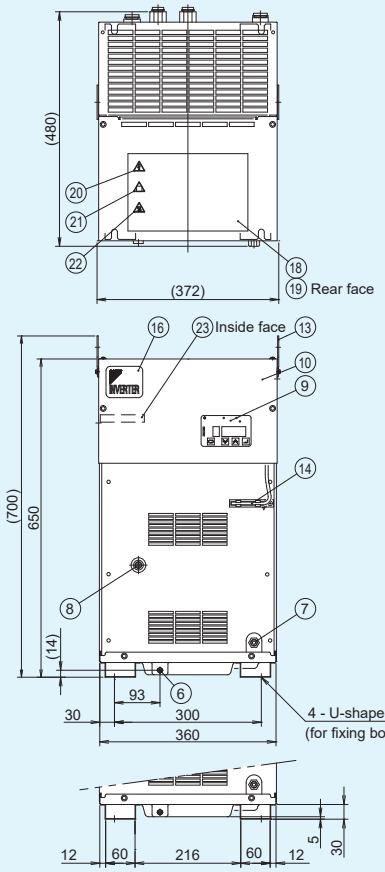

Part No.	Name	Description
1	Oil inlet	Rc3/4 Plastic plug fitted
2	Oil outlet	Rc3/4 Plastic plug fitted
3	Primary side cooling water inlet	Rc1/2 Plastic plug fitted
4	Primary side cooling water outlet	Rc1/2 Plastic plug fitted
5	Oil drain	Rc1/4 Plugged
6	Oil pan drain	M6 Plugged
7	Cooling water drain port	Rc1/4 Plugged
8	Condenser drain pan port	Rc1/4 Plugged
9	Control panel	
10	Electrical component box cover	

Part No.	Name	Description
11	Power supply inlet (right/left)	ϕ28 Hole
12	Signal line inlet (right/left)	ϕ22 Hole
13	Eye plate	ϕ25 Hole
14	Room temperature thermistor	
15	Machine nameplate	
16	Design nameplate	
17	Instruction nameplate	
18	Overall caution nameplate	
19	Electric wiring diagram nameplate	
20	Battery charge mark nameplate	
21	Cutting injury caution plate	
22	High temperature caution plate	
23	Model nameplate	

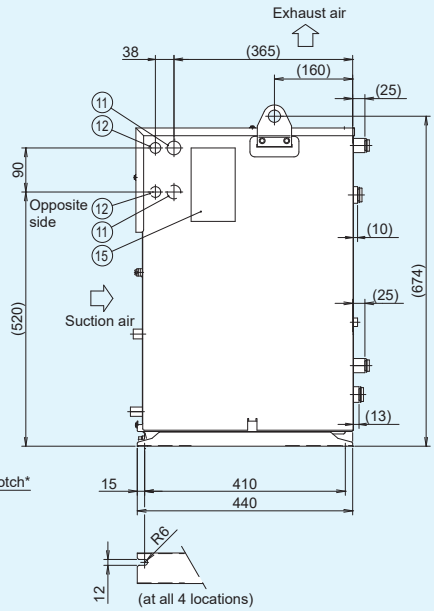

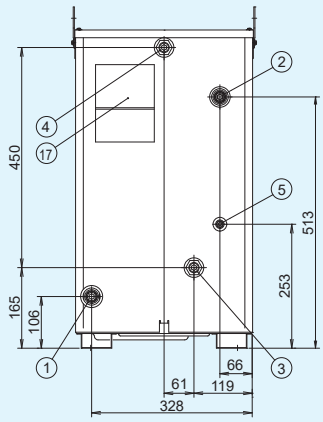

*M10 hex bolts are recommended as the fixing bolts.

AKZ149W-H

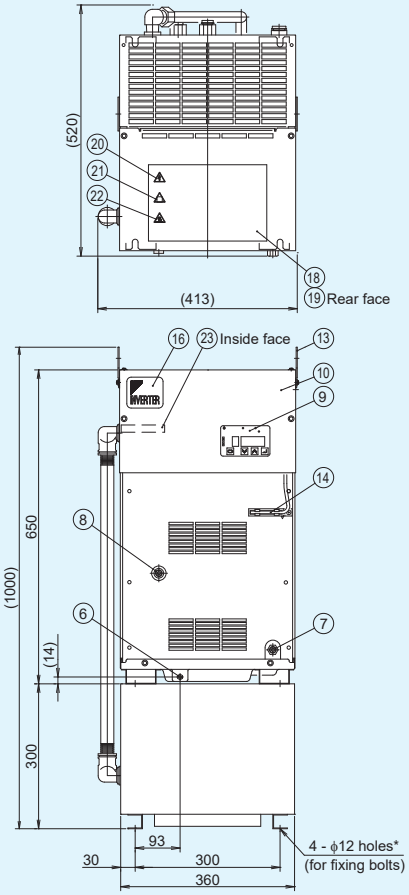

Part No.	Name	Description
1	Oil inlet	Rc3/4 Plastic plug fitted
2	Oil outlet	Rc1¼ Plastic plug fitted
3	Primary side cooling water inlet	Rc1/2 Plastic plug fitted
4	Primary side cooling water outlet	Rc1/2 Plastic plug fitted
5	Oil drain	Rc1/4 Plugged
6	Oil pan drain	M6 Plugged
7	Cooling water drain port	Rc1/4 Plugged
8	Condenser drain pan port	Rc1/4 Plugged
9	Control panel	
10	Electrical component box cover	
11	Power cable inlet (right)	ϕ28 Hole
12	Signal line inlet (right/left)	ϕ22 Hole

Part No.	Name	Description
13	Eye plate	ϕ25 Hole
14	Room temperature thermistor	
15	Machine nameplate	
16	Design nameplate	
17	Instruction nameplate	
18	Overall caution nameplate	
19	Electric wiring diagram nameplate	
20	Battery charge mark nameplate	
21	Cutting injury caution plate	
22	High temperature caution plate	
23	Model nameplate	
24	Heater box	
25	Heater drain	Rc1/4 Plugged
26	Air bleeder	Rc1/4 Plugged

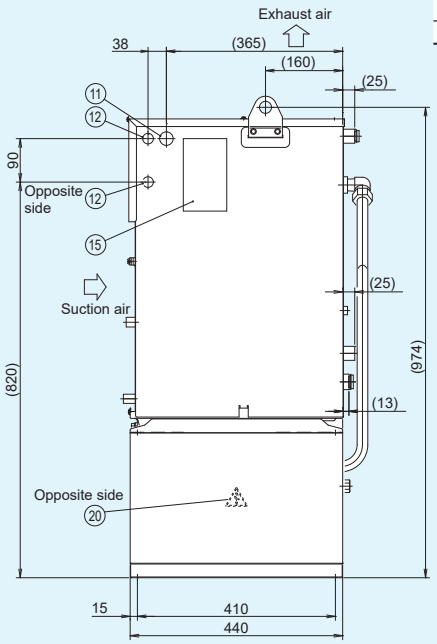

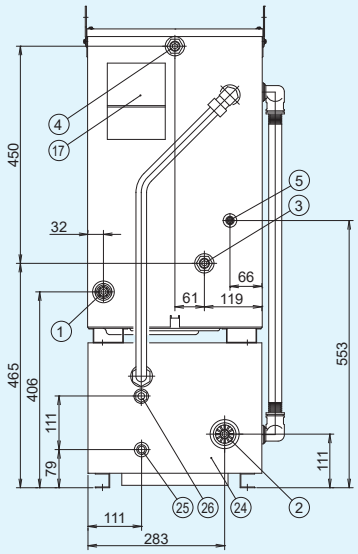

*M10 hex bolts are recommended as the fixing bolts.

AKZ149W-T

Part No.	Name	Description
1	Oil inlet	Rc3/4 Plastic plug fitted
2	Oil outlet	Rc3/4 Plastic plug fitted
3	Primary side cooling water inlet	Rc1/2 Plastic plug fitted
4	Primary side cooling water outlet	Rc1/2 Plastic plug fitted
5	Oil drain	Rc1/4 Plugged
6	Oil pan drain	M6 Plugged
7	Cooling water drain port	Rc1/4 Plugged
8	Condenser drain pan port	Rc1/4 Plugged
9	Control panel	
10	Electrical component box cover	
11	Power supply inlet (right/left)	ϕ28 Hole
12	Signal line inlet (right/left)	ϕ22 Hole

Part No.	Name	Description
13	Eye plate	ϕ25 Hole
14	Room temperature thermistor	
15	Machine nameplate	
16	Design nameplate	
17	Instruction nameplate	
18	Overall caution nameplate	
19	Electric wiring diagram nameplate	
20	Battery charge mark nameplate	
21	Cutting injury caution plate	
22	High temperature caution plate	
23	Model nameplate	
24	Oil tank	15 L
25	Tank drain port	Rc3/8 Plugged
26	Oil level gauge	KLA-50A
27	Oil filler port with air breather	HY-06T

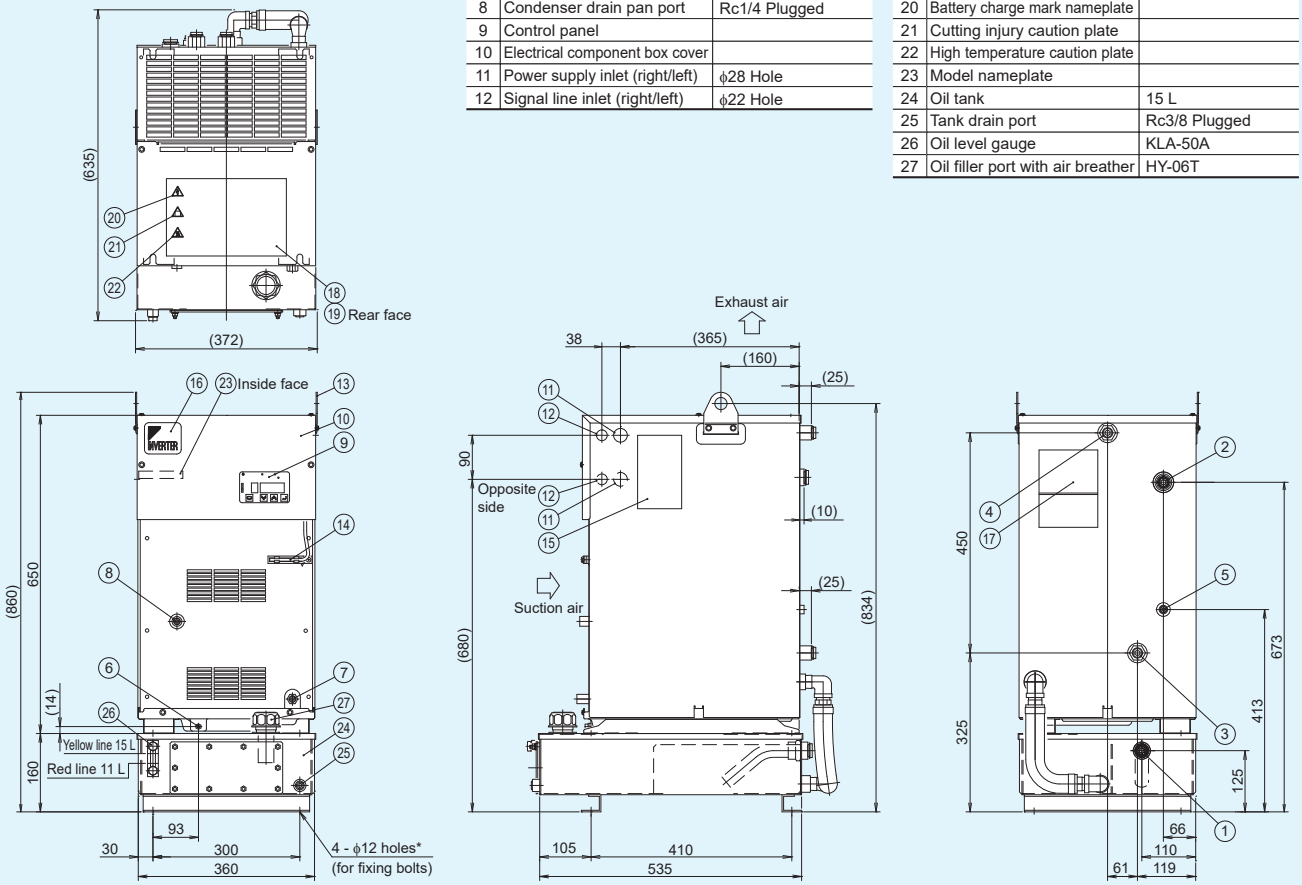

*M10 hex bolts are recommended as the fixing bolts.

External Dimension Diagram (AKZ329W)

AKZ329W (-B, -C)

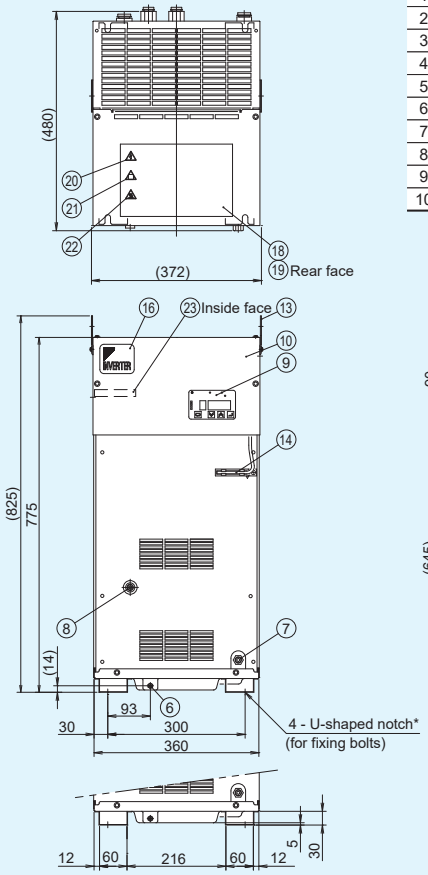

Part No.	Name	Description
1	Oil inlet	Rc3/4 Plastic plug fitted
2	Oil outlet	Rc3/4 Plastic plug fitted
3	Primary side cooling water inlet	Rc1/2 Plastic plug fitted
4	Primary side cooling water outlet	Rc1/2 Plastic plug fitted
5	Oil drain	Rc1/4 Plugged
6	Oil pan drain	M6 Plugged
7	Cooling water drain port	Rc1/4 Plugged
8	Condenser drain pan port	Rc1/4 Plugged
9	Control panel	
10	Electrical component box cover	

Part No.	Name	Description
11	Power supply inlet (right/left)	ϕ28 Hole
12	Signal line inlet (right/left)	ϕ22 Hole
13	Eye plate	ϕ25 Hole
14	Room temperature thermistor	
15	Machine nameplate	
16	Design nameplate	
17	Instruction nameplate	
18	Overall caution nameplate	
19	Electric wiring diagram nameplate	
20	Battery charge mark nameplate	
21	Cutting injury caution plate	
22	High temperature caution plate	
23	Model nameplate	

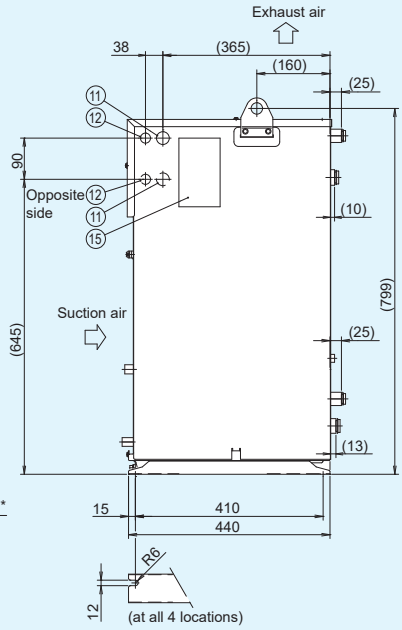

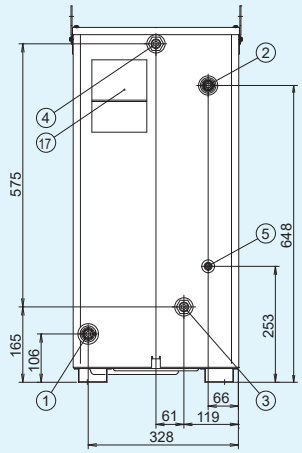

*M10 hex bolts are recommended as the fixing bolts.

AKZ329W-H

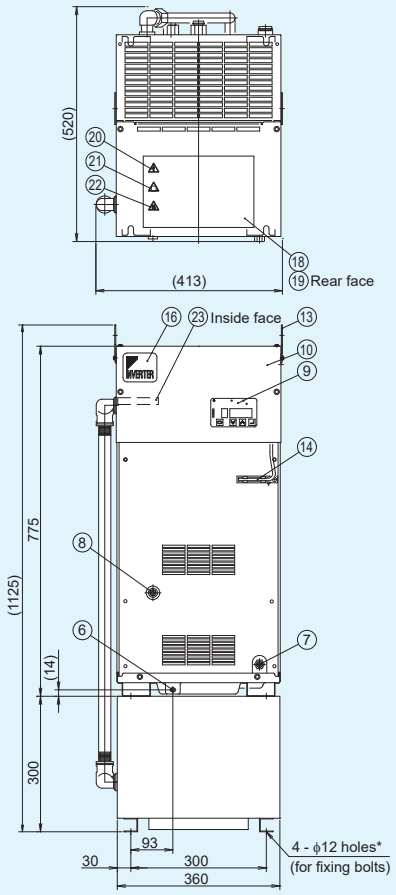

Part No.	Name	Description
1	Oil inlet	Rc3/4 Plastic plug fitted
2	Oil outlet	Rc1¼ Plastic plug fitted
3	Primary side cooling water inlet	Rc1/2 Plastic plug fitted
4	Primary side cooling water outlet	Rc1/2 Plastic plug fitted
5	Oil drain	Rc1/4 Plugged
6	Oil pan drain	M6 Plugged
7	Cooling water drain port	Rc1/4 Plugged
8	Condenser drain pan port	Rc1/4 Plugged
9	Control panel	
10	Electrical component box cover	
11	Power cable inlet (right)	ϕ28 Hole
12	Signal line inlet (right/left)	ϕ22 Hole

Part No.	Name	Description
13	Eye plate	ϕ25 Hole
14	Room temperature thermistor	
15	Machine nameplate	
16	Design nameplate	
17	Instruction nameplate	
18	Overall caution nameplate	
19	Electric wiring diagram nameplate	
20	Battery charge mark nameplate	
21	Cutting injury caution plate	
22	High temperature caution plate	
23	Model nameplate	
24	Heater box	
25	Heater drain	Rc1/4 Plugged
26	Air bleeder	Rc1/4 Plugged

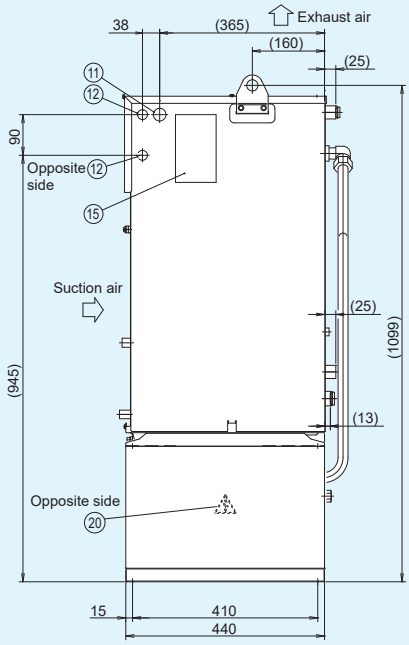

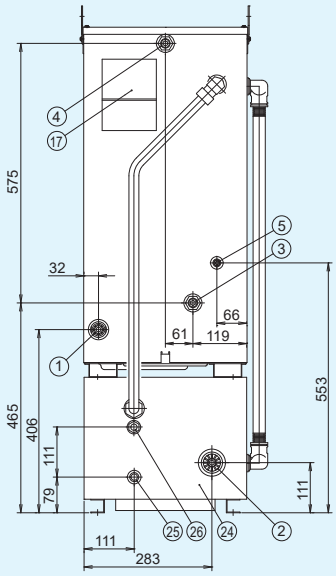

*M10 hex bolts are recommended as the fixing bolts.

AKZ329W-T

Part No.	Name	Description
1	Oil inlet	Rc3/4 Plastic plug fitted
2	Oil outlet	Rc3/4 Plastic plug fitted
3	Primary side cooling water inlet	Rc1/2 Plastic plug fitted
4	Primary side cooling water outlet	Rc1/2 Plastic plug fitted
5	Oil drain	Rc1/4 Plugged
6	Oil pan drain	M6 Plugged
7	Cooling water drain port	Rc1/4 Plugged
8	Condenser drain pan port	Rc1/4 Plugged
9	Control panel	
10	Electrical component box cover	
11	Power supply inlet (right/left)	ϕ28 Hole
12	Signal line inlet (right/left)	ϕ22 Hole

Part No.	Name	Description
13	Eye plate	ϕ25 Hole
14	Room temperature thermistor	
15	Machine nameplate	
16	Design nameplate	
17	Instruction nameplate	
18	Overall caution nameplate	
19	Electric wiring diagram nameplate	
20	Battery charge mark nameplate	
21	Cutting injury caution plate	
22	High temperature caution plate	
23	Model nameplate	
24	Oil tank	20 L
25	Tank drain port	Rc3/8 Plugged
26	Oil level gauge	KLA-80A
27	Oil filler port with air breather	HY-06T

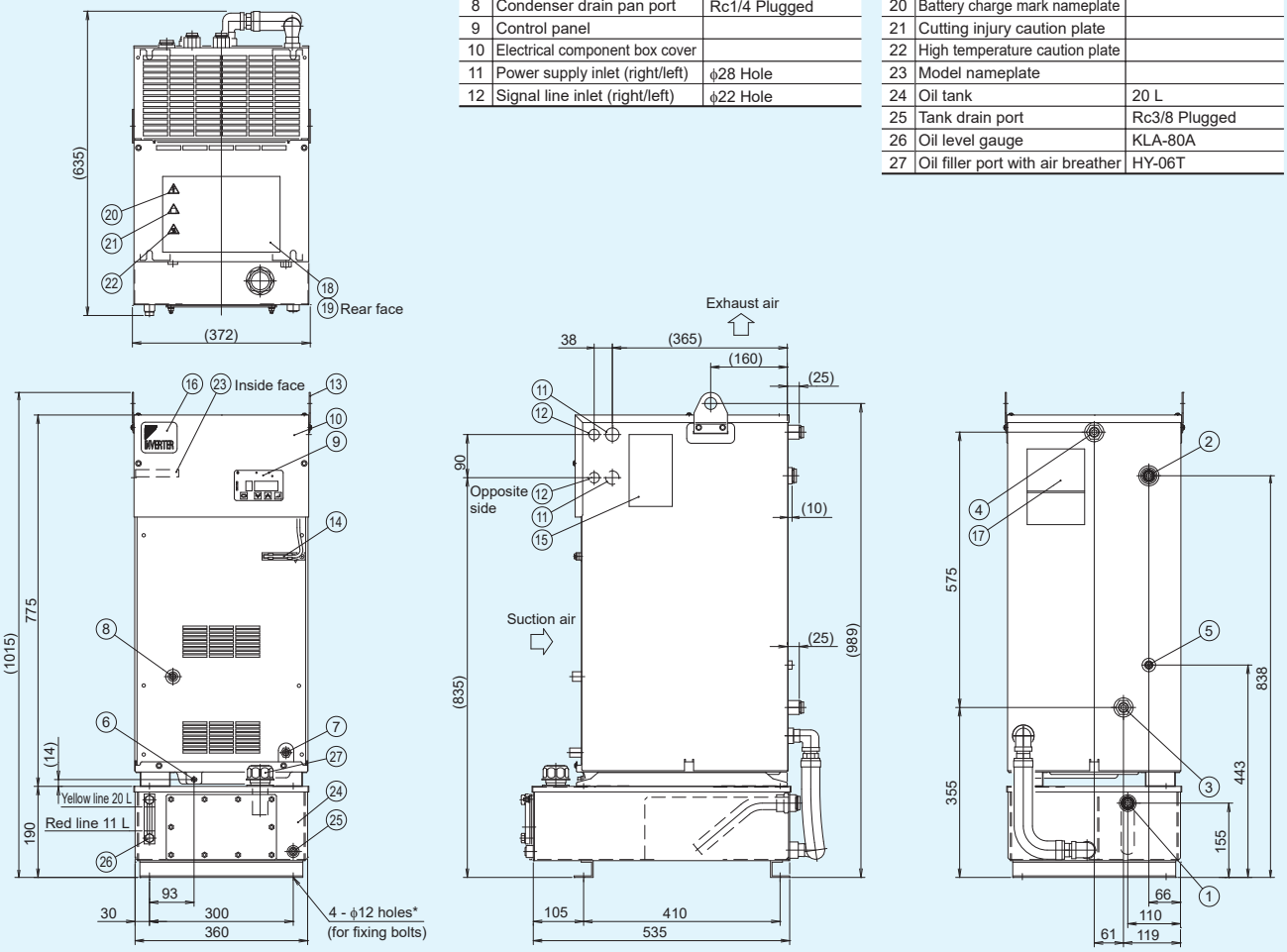

*M10 hex bolts are recommended as the fixing bolts.

External Dimension Diagram (AKZ439W)

AKZ439W (-B, -C)

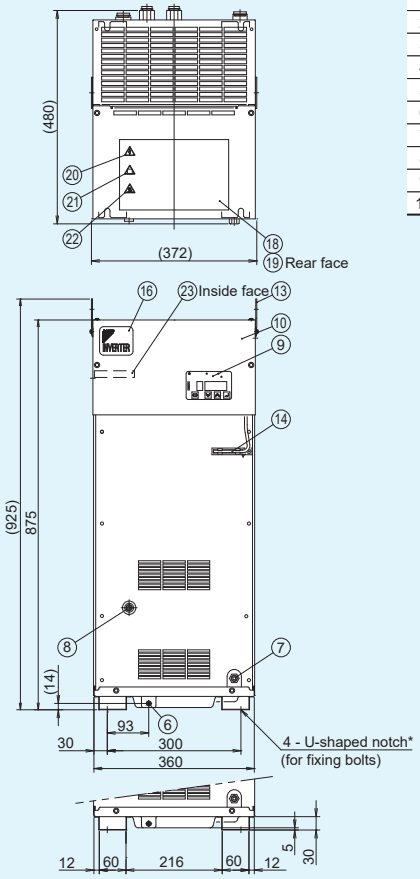

Part No.	Name	Description
1	Oil inlet	Rc3/4 Plastic plug fitted
2	Oil outlet	Rc3/4 Plastic plug fitted
3	Primary side cooling water inlet	Rc1/2 Plastic plug fitted
4	Primary side cooling water outlet	Rc1/2 Plastic plug fitted
5	Oil drain	Rc1/4 Plugged
6	Oil pan drain	M6 Plugged
7	Cooling water drain port	Rc1/4 Plugged
8	Condenser drain pan port	Rc1/4 Plugged
9	Control panel	
10	Electrical component box cover	

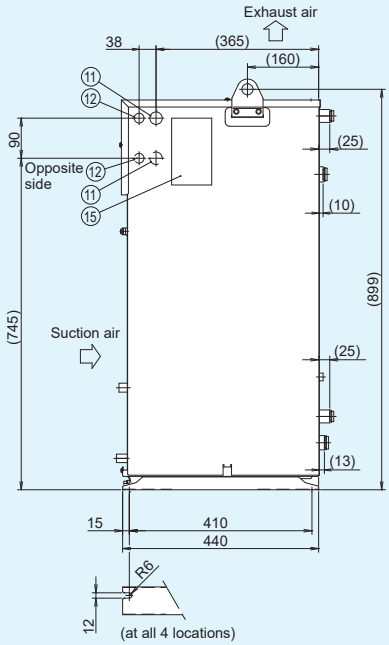

Part No.	Name	Description
11	Power supply inlet (right/left)	ϕ28 Hole
12	Signal line inlet (right/left)	ϕ22 Hole
13	Eye plate	ϕ25 Hole
14	Room temperature thermistor	
15	Machine nameplate	
16	Design nameplate	
17	Instruction nameplate	
18	Overall caution nameplate	
19	Electric wiring diagram nameplate	
20	Battery charge mark nameplate	
21	Cutting injury caution plate	
22	High temperature caution plate	
23	Model nameplate	

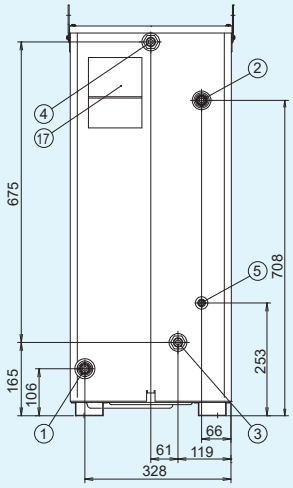

*M10 hex bolts are recommended as the fixing bolts.

AKZ439W-H

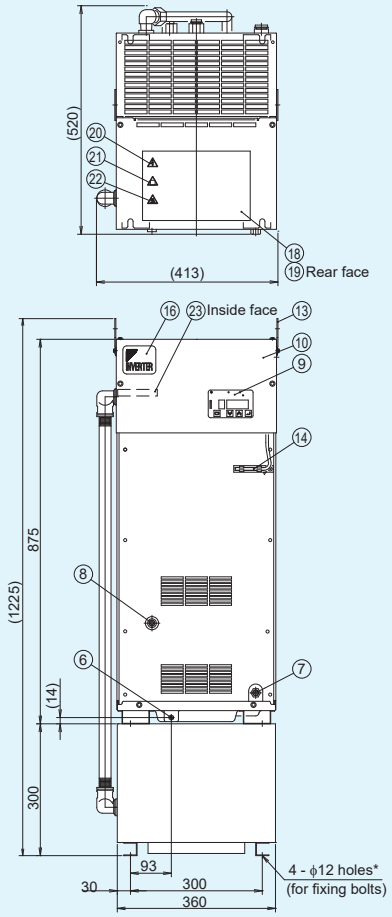

Part No.	Name	Description
1	Oil inlet	Rc3/4 Plastic plug fitted
2	Oil outlet	Rc1¼ Plastic plug fitted
3	Primary side cooling water inlet	Rc1/2 Plastic plug fitted
4	Primary side cooling water outlet	Rc1/2 Plastic plug fitted
5	Oil drain	Rc1/4 Plugged
6	Oil pan drain	M6 Plugged
7	Cooling water drain port	Rc1/4 Plugged
8	Condenser drain pan port	Rc1/4 Plugged
9	Control panel	
10	Electrical component box cover	
11	Power cable inlet (right)	ϕ28 Hole
12	Signal line inlet (right/left)	ϕ22 Hole

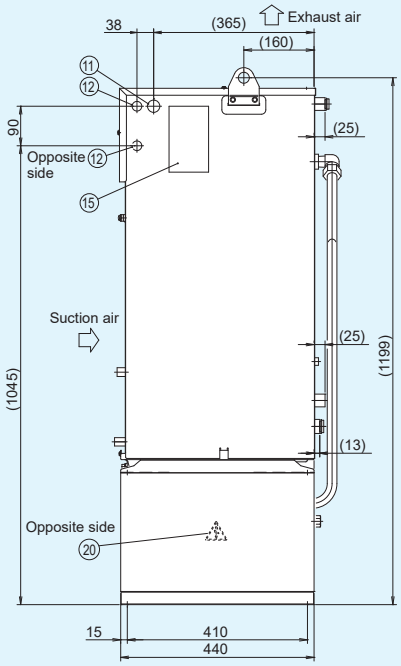

Part No.	Name	Description
13	Eye plate	ϕ25 Hole
14	Room temperature thermistor	
15	Machine nameplate	
16	Design nameplate	
17	Instruction nameplate	
18	Overall caution nameplate	
19	Electric wiring diagram nameplate	
20	Battery charge mark nameplate	
21	Cutting injury caution plate	
22	High temperature caution plate	
23	Model nameplate	
24	Heater box	
25	Heater drain	Rc1/4 Plugged
26	Air bleeder	Rc1/4 Plugged

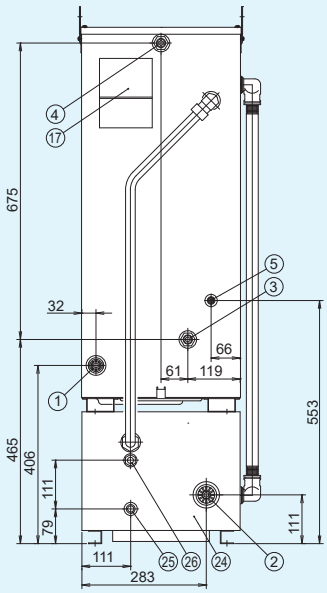

*M10 hex bolts are recommended as the fixing bolts.

AKZ439W-T

Part No.	Name	Description
1	Oil inlet	Rc3/4 Plastic plug fitted
2	Oil outlet	Rc3/4 Plastic plug fitted
3	Primary side cooling water inlet	Rc1/2 Plastic plug fitted
4	Primary side cooling water outlet	Rc1/2 Plastic plug fitted
5	Oil drain	Rc1/4 Plugged
6	Oil pan drain	M6 Plugged
7	Cooling water drain port	Rc1/4 Plugged
8	Condenser drain pan port	Rc1/4 Plugged
9	Control panel	
10	Electrical component box cover	
11	Power supply inlet (right/left)	ϕ28 Hole
12	Signal line inlet (right/left)	ϕ22 Hole

Part No.	Name	Description
13	Eye plate	ϕ25 Hole
14	Room temperature thermistor	
15	Machine nameplate	
16	Design nameplate	
17	Instruction nameplate	
18	Overall caution nameplate	
19	Electric wiring diagram nameplate	
20	Battery charge mark nameplate	
21	Cutting injury caution plate	
22	High temperature caution plate	
23	Model nameplate	
24	Oil tank	20 L
25	Tank drain port	Rc3/8 Plugged
26	Oil level gauge	KLA-80A
27	Oil filler port with air breather	HY-06T

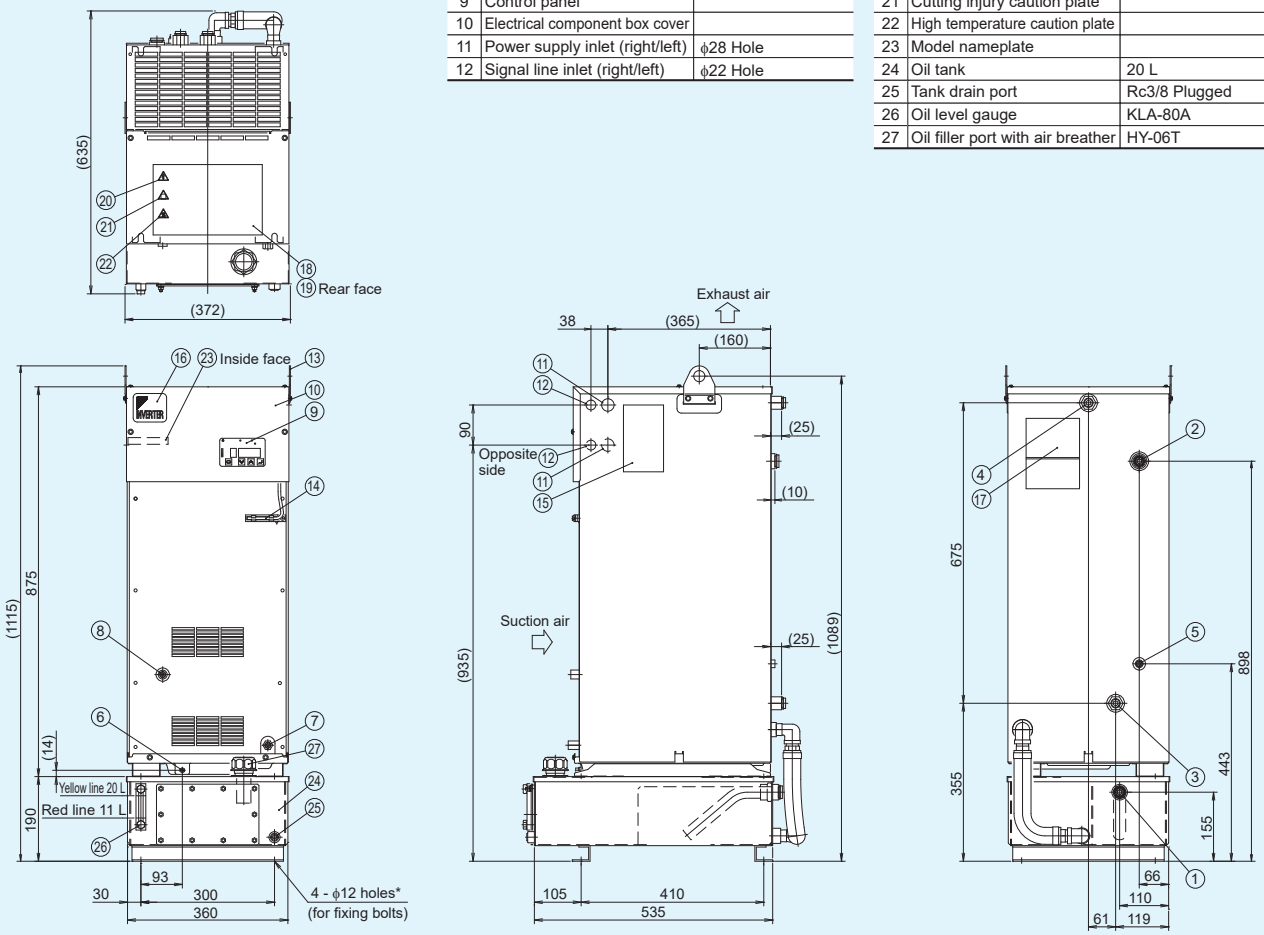

*M10 hex bolts are recommended as the fixing bolts.

External Dimension Diagram (AKZ569W)

AKZ569W (-B, -C)

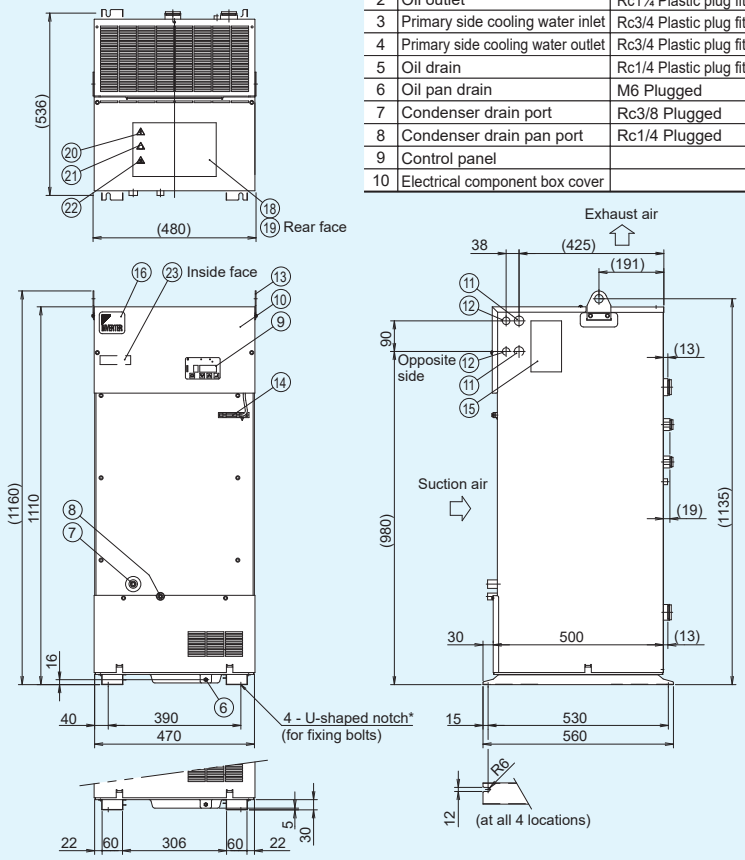

Part No.	Name	Description
1	Oil inlet	Rc1¼ Plastic plug fitted
2	Oil outlet	Rc1¼ Plastic plug fitted
3	Primary side cooling water inlet	Rc3/4 Plastic plug fitted
4	Primary side cooling water outlet	Rc3/4 Plastic plug fitted
5	Oil drain	Rc1/4 Plastic plug fitted
6	Oil pan drain	M6 Plugged
7	Condenser drain port	Rc3/8 Plugged
8	Condenser drain pan port	Rc1/4 Plugged
9	Control panel	
10	Electrical component box cover	

Part No.	Name	Description
11	Power supply inlet (right/left)	ϕ28 Hole
12	Signal line inlet (right/left)	ϕ22 Hole
13	Eye plate	ϕ25 Hole
14	Room temperature thermistor	
15	Machine nameplate	
16	Design nameplate	
17	Instruction nameplate	
18	Overall caution nameplate	
19	Electric wiring diagram nameplate	
20	Battery charge mark nameplate	
21	Cutting injury caution plate	
22	High temperature caution plate	
23	Model nameplate	

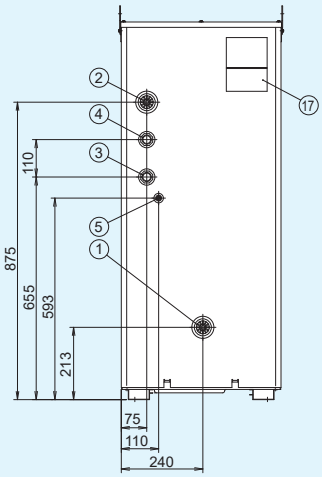

*M10 hex bolts are recommended as the fixing bolts.

AKZ569W-H

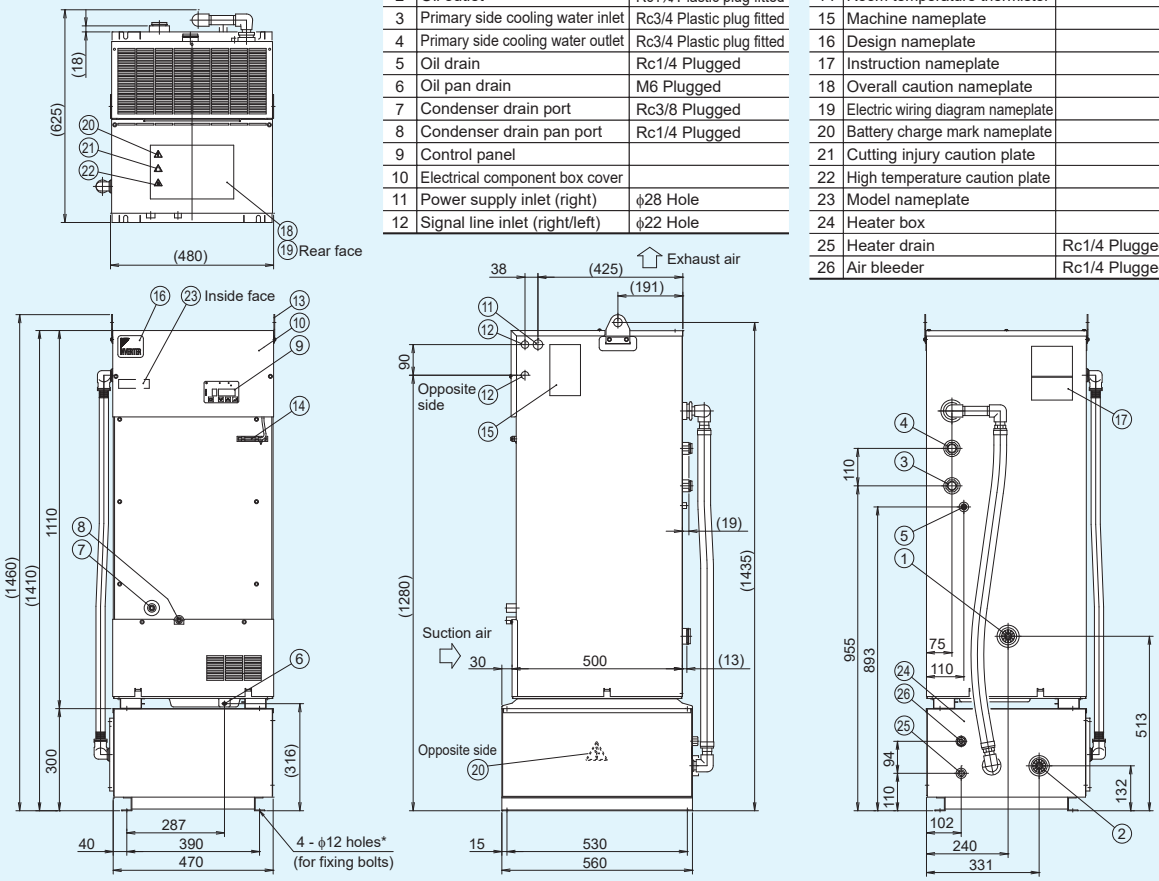

Part No.	Name	Description
1	Oil inlet	Rc1¼ Plastic plug fitted
2	Oil outlet	Rc1¼ Plastic plug fitted
3	Primary side cooling water inlet	Rc3/4 Plastic plug fitted
4	Primary side cooling water outlet	Rc3/4 Plastic plug fitted
5	Oil drain	Rc1/4 Plugged
6	Oil pan drain	M6 Plugged
7	Condenser drain port	Rc3/8 Plugged
8	Condenser drain pan port	Rc1/4 Plugged
9	Control panel	
10	Electrical component box cover	
11	Power supply inlet (right)	ϕ28 Hole
12	Signal line inlet (right/left)	ϕ22 Hole

Part No.	Name	Description
13	Eye plate	ϕ25 Hole
14	Room temperature thermistor	
15	Machine nameplate	
16	Design nameplate	
17	Instruction nameplate	
18	Overall caution nameplate	
19	Electric wiring diagram nameplate	
20	Battery charge mark nameplate	
21	Cutting injury caution plate	
22	High temperature caution plate	
23	Model nameplate	
24	Heater box	
25	Heater drain	Rc1/4 Plugged
26	Air bleeder	Rc1/4 Plugged

*M10 hex bolts are recommended as the fixing bolts.

AKZ569W-T

Part No.	Name	Description
1	Oil inlet	Rc1 Plastic plug fitted
2	Oil outlet	Rc1¼ Plastic plug fitted
3	Primary side cooling water inlet	Rc3/4 Plastic plug fitted
4	Primary side cooling water outlet	Rc3/4 Plastic plug fitted
5	Oil drain	Rc1/4 Plugged
6	Oil pan drain	M6 Plugged
7	Condenser drain port	Rc3/8 Plugged
8	Condenser drain pan port	Rc1/4 Plugged
9	Control panel	
10	Electrical component box cover	
11	Power supply inlet (right/left)	ϕ28 Hole
12	Signal line inlet (right/left)	ϕ22 Hole

Part No.	Name	Description
13	Eye plate	ϕ25 Hole
14	Room temperature thermistor	
15	Machine nameplate	
16	Design nameplate	
17	Instruction nameplate	
18	Overall caution nameplate	
19	Electric wiring diagram nameplate	
20	Battery charge mark nameplate	
21	Cutting injury caution plate	
22	High temperature caution plate	
23	Model nameplate	
24	Oil tank	50 L
25	Tank drain port	Rc3/8 Plugged
26	Oil level gauge	KLA-80A
27	Oil filler port with air breather	HY-06T

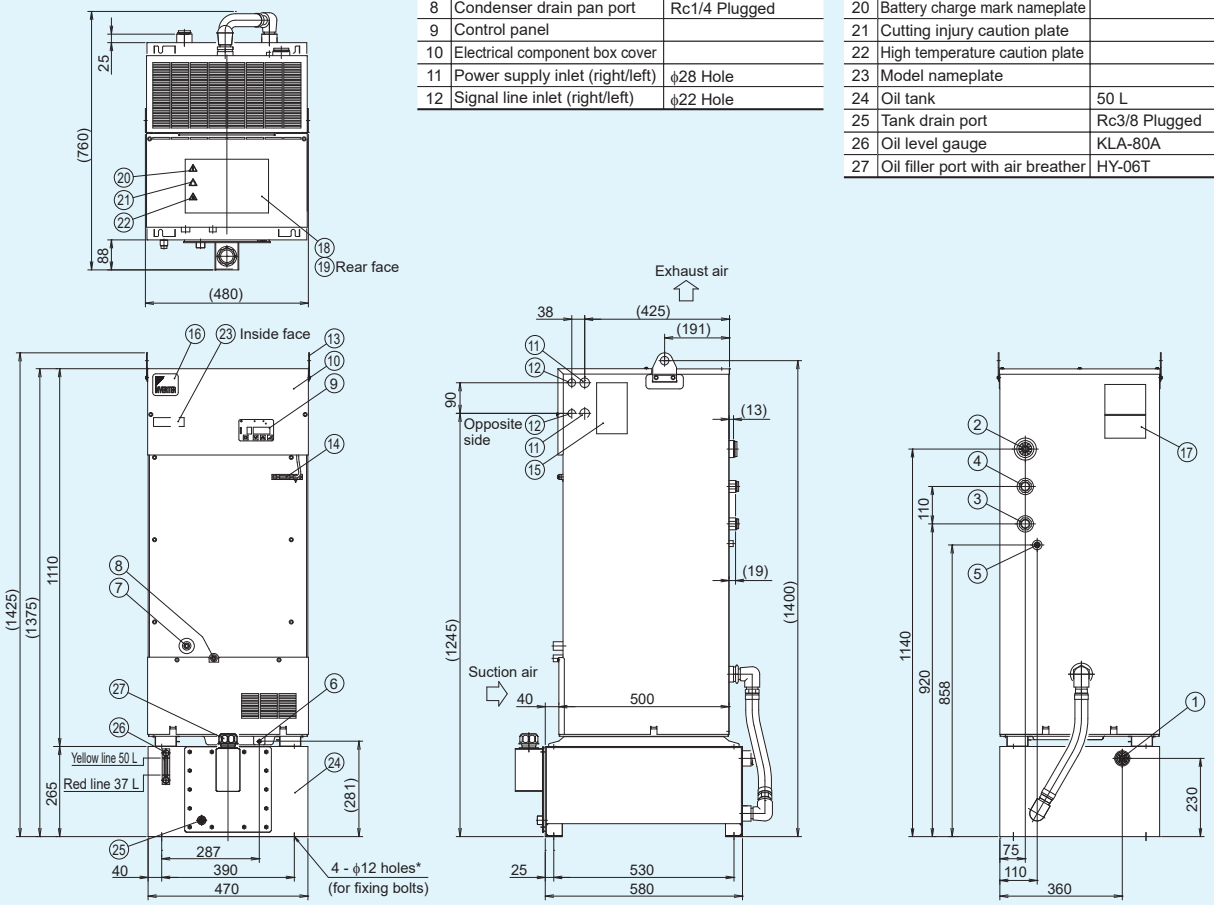

*M10 hex bolts are recommended as the fixing bolts.

External Dimension Diagram (AKZ909W)

AKZ909W (-B, -C)

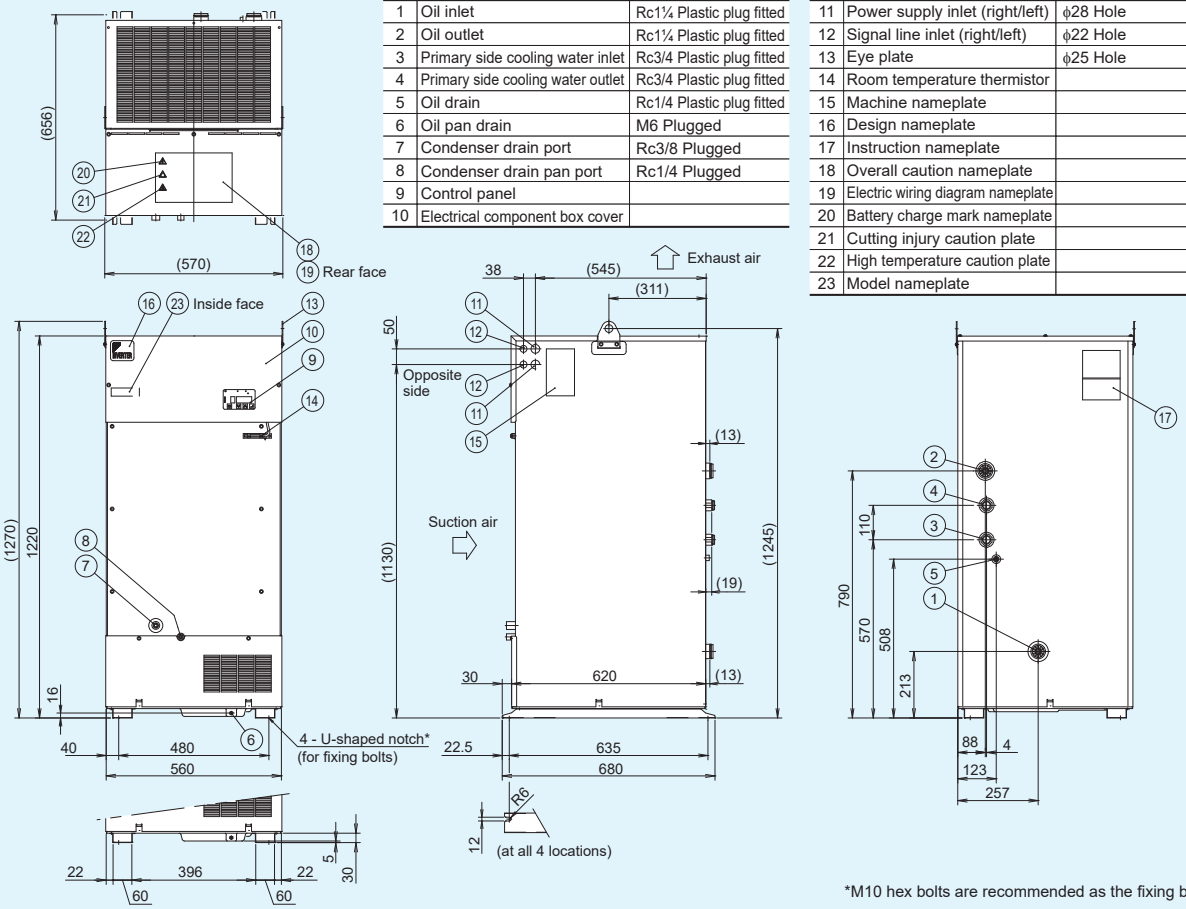

Part No.	Name	Description
1	Oil inlet	Rc1¼ Plastic plug fitted
2	Oil outlet	Rc1¼ Plastic plug fitted
3	Primary side cooling water inlet	Rc3/4 Plastic plug fitted
4	Primary side cooling water outlet	Rc3/4 Plastic plug fitted
5	Oil drain	Rc1/4 Plastic plug fitted
6	Oil pan drain	M6 Plugged
7	Condenser drain port	Rc3/8 Plugged
8	Condenser drain pan port	Rc1/4 Plugged
9	Control panel	
10	Electrical component box cover	

Part No.	Name	Description
11	Power supply inlet (right/left)	ϕ28 Hole
12	Signal line inlet (right/left)	ϕ22 Hole
13	Eye plate	ϕ25 Hole
14	Room temperature thermistor	
15	Machine nameplate	
16	Design nameplate	
17	Instruction nameplate	
18	Overall caution nameplate	
19	Electric wiring diagram nameplate	
20	Battery charge mark nameplate	
21	Cutting injury caution plate	
22	High temperature caution plate	
23	Model nameplate	

*M10 hex bolts are recommended as the fixing bolts.

AKZ909W-H

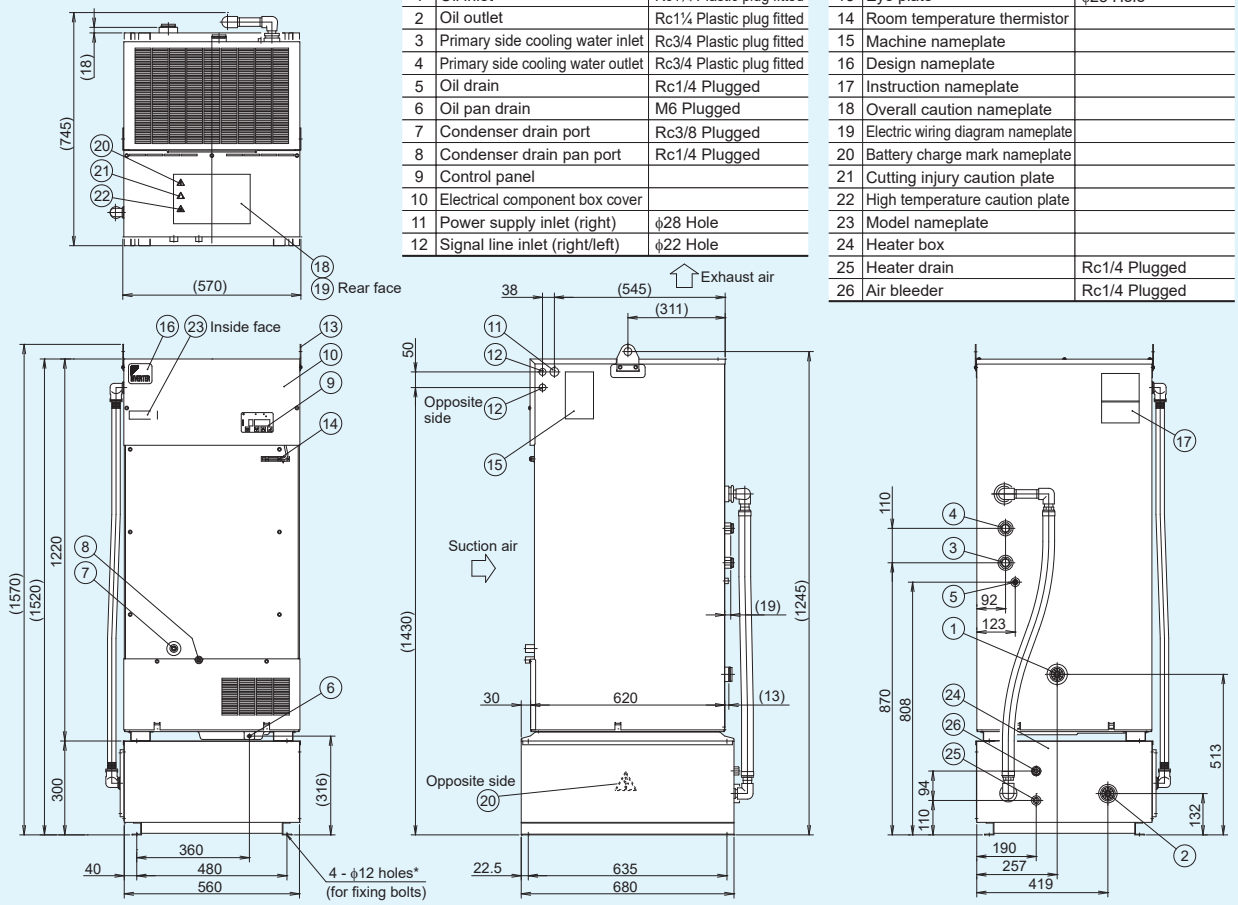

Part No.	Name	Description
1	Oil inlet	Rc1¼ Plastic plug fitted
2	Oil outlet	Rc1¼ Plastic plug fitted
3	Primary side cooling water inlet	Rc3/4 Plastic plug fitted
4	Primary side cooling water outlet	Rc3/4 Plastic plug fitted
5	Oil drain	Rc1/4 Plugged
6	Oil pan drain	M6 Plugged
7	Condenser drain port	Rc3/8 Plugged
8	Condenser drain pan port	Rc1/4 Plugged
9	Control panel	
10	Electrical component box cover	
11	Power supply inlet (right)	ϕ28 Hole
12	Signal line inlet (right/left)	ϕ22 Hole

Part No.	Name	Description
13	Eye plate	ϕ25 Hole
14	Room temperature thermistor	
15	Machine nameplate	
16	Design nameplate	
17	Instruction nameplate	
18	Overall caution nameplate	
19	Electric wiring diagram nameplate	
20	Battery charge mark nameplate	
21	Cutting injury caution plate	
22	High temperature caution plate	
23	Model nameplate	
24	Heater box	
25	Heater drain	Rc1/4 Plugged
26	Air bleeder	Rc1/4 Plugged

*M10 hex bolts are recommended as the fixing bolts.

AKZ909W-T

Part No.	Name	Description
1	Oil inlet	Rc1 Plastic plug fitted
2	Oil outlet	Rc1¼ Plastic plug fitted
3	Primary side cooling water inlet	Rc3/4 Plastic plug fitted
4	Primary side cooling water outlet	Rc3/4 Plastic plug fitted
5	Oil drain	Rc1/4 Plugged
6	Oil pan drain	M6 Plugged
7	Condenser drain port	Rc3/8 Plugged
8	Condenser drain pan port	Rc1/4 Plugged
9	Control panel	
10	Electrical component box cover	
11	Power supply inlet (right/left)	ϕ28 Hole
12	Signal line inlet (right/left)	ϕ22 Hole

Part No.	Name	Description
13	Eye plate	ϕ25 Hole
14	Room temperature thermistor	
15	Machine nameplate	
16	Design nameplate	
17	Instruction nameplate	
18	Overall caution nameplate	
19	Electric wiring diagram nameplate	
20	Battery charge mark nameplate	
21	Cutting injury caution plate	
22	High temperature caution plate	
23	Model nameplate	
24	Oil tank	70 L
25	Tank drain port	Rc3/8 Plugged
26	Oil level gauge	KLA-80A
27	Oil filler port with air breather	

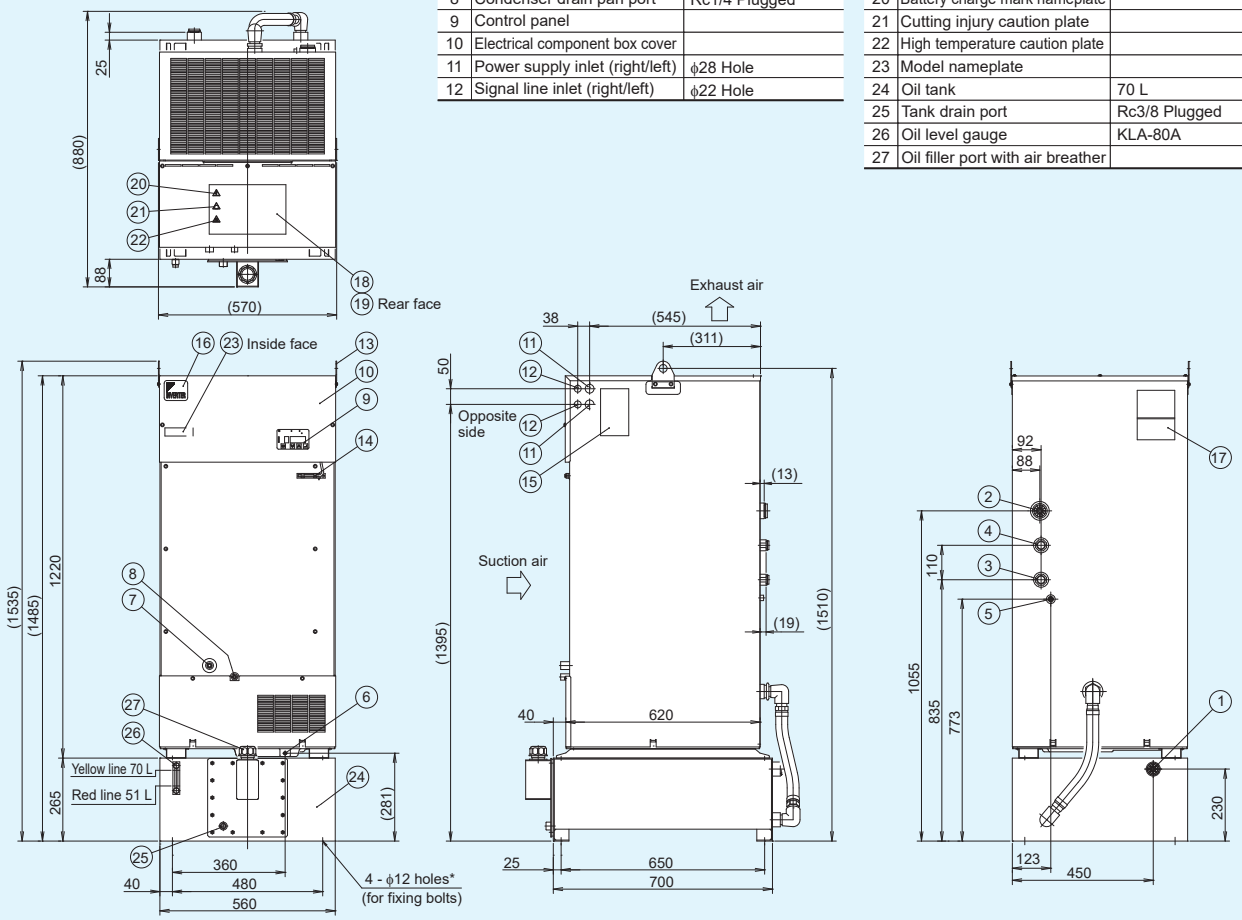

*M10 hex bolts are recommended as the fixing bolts.

AKJ9W For cutting/grinding fluid (oil) | Immersion type |

Overview/Features

Immersion-type oil cooling unit mounted directly on the coolant tank

It is a cooler that is placed on the coolant tank and cools the fluid inside the tank directly with a cooling coil.
* The circulation pump is not provided as an accessory and must be prepared separately.

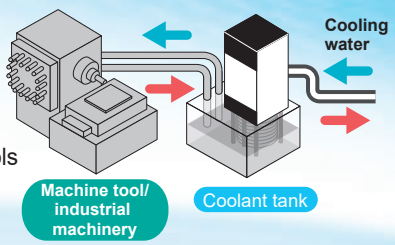

Highly accurate temperature control through inverter controlled compressor

The coolant temperature can be controlled within ±0.1°C over the entire cooling load range (from 0 to 100% load) improving the accuracy of the machine tool.

The water-cooled condenser type oil cooling units are "exhaust heat free".

* Excluding exhaust heat from electrical parts.

The exhaust heat from the oil cooling unit is removed by cooling water.
*Please prepare cooling water that meets water quality standards.

Little to no "exhaust heat" from the oil cooling unit.

*Excluding exhaust heat from electrical parts.

- Enables work in a comfortable environment
- Realizes reduced air-conditioning load in the factory and energy savings
- Realize stable performance of machines that require precise temperature control in the factory

Comparison of oil cooling unit surface temperatures during operation

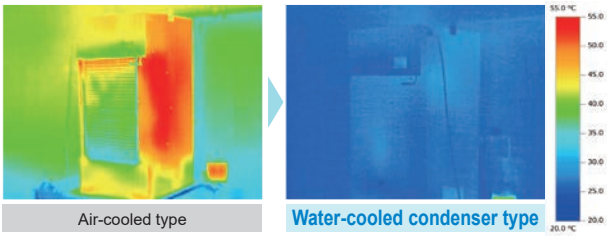

Time spent cleaning a clogged condenser is greatly reduced.

- Adopted a double tube condenser, which is clog resistant
- Reliable unit for long term use

Specifications are compatible with the air-cooled units. (Cooling capacity, external dimensions, etc.)

- Easy to replace an existing air cooled condenser type unit with this water-cooled model if cooling water can be supplied to the unit.

Nomenclature

AKJ	※※	9	W	-	※※※
1	2	3	4	5	

1 Oil cooling unit identification code

AKJ: High-accuracy inverter controlled oil cooling unit
Immersion type for cutting/grinding fluid (oil)

2 Cooling capacity (kW)

18 : 1.8 kW
35 : 3.5 kW
45 : 4.5 kW
56 : 5.6 kW
90 : 9.0 kW

3 Symbol of series
(Symbol to represent model change)

9: "9" Series

4 Water-cooled condenser type oil cooling unit identification codes

W: Water-cooled condenser type cooling unit

5 Symbol of option type

Options and their combinations (See the table to the right.)

Special specifications

-※※※ (3-digit number), C※※※ (3-digit number), etc. Please consult us about detailed information.

Options and their combinations

Symbol of option type	With breaker	Compliance with CE/UKCA	With heater
–B	✓	–	–
–C	–	✓	–
–H	–	–	✓
–BC	✓	✓	–
–BH	✓	–	✓
–CH	–	✓	✓
–BCH	✓	✓	✓

Cooling Capacity Characteristic Chart

AKJ189W

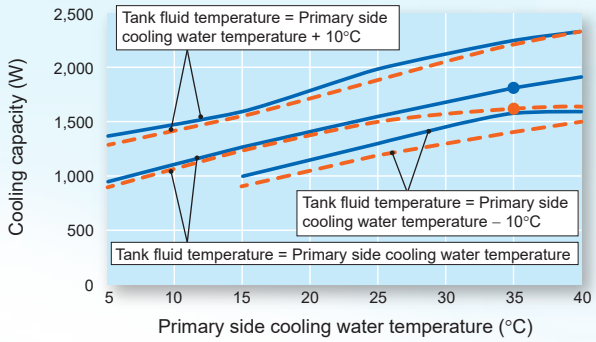

AKJ359W

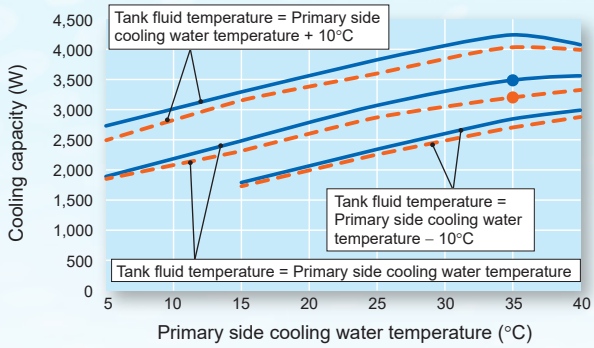

AKJ459W

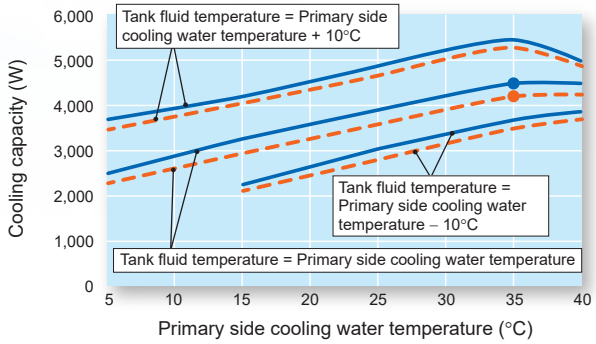

AKJ569W

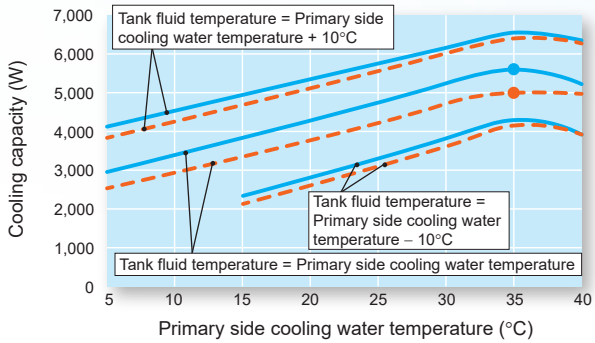

AKJ909W

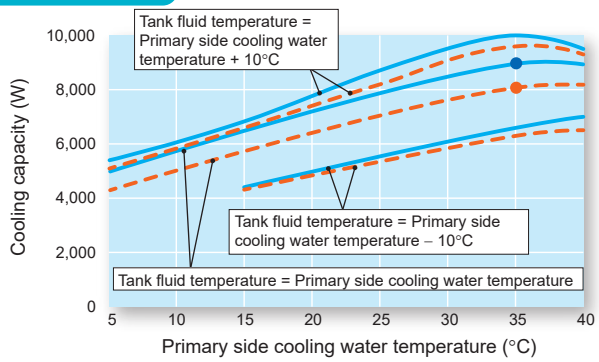

Solid line —— **When operated at 60 Hz**
Broken line - - - **When operated at 50 Hz**

1. The mark "●●" shows the standard point.
   (Primary side cooling water temperature: 35°C, rated primary side cooling water volume: see table below, tank fluid temperature: 35°C, oil used: ISO VG32, 1 atm)
2. The cooling capacity varies depending on conditions such as the primary side cooling water temperature, primary side cooling water volume, tank fluid temperature, oil dynamic viscosity and other factors

■Rated primary side cooling water volume

Model name	Rated primary side cooling water volume
AKJ189W	12 L/min
AKJ359W	18 L/min
AKJ459W	30 L/min
AKJ569W	42 L/min
AKJ909W	42 L/min

Notes on Installation and Handling

1. Request to install a water strainer

Install a strainer (20 to 40 mesh) with low pressure loss in the water piping system.

- Operation without installing a strainer at the primary side water pipe inlet will cause debris in the water piping to clog the inside of the condenser, causing unit stoppages due to abnormalities, or failure of the unit.
- Much of the debris in the water piping system adheres to the strainer during trial operation and adjustment, so please clean or replace the strainer before performing full-scale operation. In addition, please inspect and clean the strainer regularly.
- Do not use water other than that of the specified water quality when using industrial water for the primary side cooling water and cooled fluid.

2. Water quality standards

*Use water that satisfies the following standard for tap water level.

■ **Guideline of Water Quality for Refrigeration and Air Conditioning Equipment (JRA GL02E-1994)**

	Item	Chemical formula	Water quality standard	Unit
Standard items	pH	–	6.5 to 8.2	pH (25°C)
	Electrical conductivity	–	0.2 to 30	mS/m (25°C)
	Chloride ion	Cl^-	50 maximum	mg/L (ppm)
	Sulfate ion	SO_4^{2-}	50 maximum	mg/L (ppm)
	Acid consumption (pH4.8)	$CaCO_3$	50 maximum	mg/L (ppm)
	Total hardness	–	70 maximum	mg/L (ppm)
	Calcium hardness	$CaCO_3$	50 maximum	mg/L (ppm)
	Ionic silica	SiO_2	30 maximum	mg/L (ppm)
Reference items	Iron	Fe	0.3 maximum	mg/L (ppm)
	Copper	Cu	0.1 maximum	mg/L (ppm)
	Sulfide ion	S^{2-}	Not to be detected	mg/L (ppm)
	Ammonium ion	NH_4^+	0.1 maximum	mg/L (ppm)
	Residual chlorine	Cl	0.3 maximum	mg/L (ppm)
	Free carbon dioxide	CO_2	4.0 maximum	mg/L (ppm)
	Stability index	–	6.0 to 7.0	–

Specifications (AKJ189W/359W/459W)

Oil cooling unit horsepower (HP)	0.5				1.2				1.5			
Model name	AKJ189W				AKJ359W				AKJ459W			
	Standard	–B	–C	–H	Standard	–B	–C	–H	Standard	–B	–C	–H
Cooling capacity (50/60 Hz)*1 kW	1.6/1.8				3.2/3.5				4.2/4.5			
Heater kW	–			1	–			1	–			1
Supply power*2	Three phase AC 200/200·220 V 50/60 Hz				Three phase AC 200/200·220 V 50/60 Hz				Three phase AC 200/200·220 V 50/60 Hz			
Circuit voltage: Main circuit												
Circuit voltage: Operating circuit	DC12/24 V											
Max. power consumption / Max. current consumption: When cooling 200 V 50 Hz	0.72 kW/2.9 A				1.36 kW/5.2 A				1.38 kW/5.3 A			
When cooling 200 V 60 Hz	0.71 kW/2.8 A				1.36 kW/5.1 A				1.38 kW/5.2 A			
When cooling 220 V 60 Hz	0.72 kW/2.7 A				1.37 kW/4.8 A				1.39 kW/4.9 A			
When heating 200 V 50 Hz	–			1.20 kW/3.8 A	–			1.20 kW/3.8 A	–			1.20 kW/3.8 A
When heating 200 V 60 Hz	–			1.20 kW/3.8 A	–			1.20 kW/3.8 A	–			1.20 kW/3.8 A
When heating 220 V 60 Hz	–			1.44 kW/4.2 A	–			1.44 kW/4.2 A	–			1.44 kW/4.2 A
Exterior color	Ivory white											
External dimensions (H × W × D) mm	920 × 360 × 440				1,045 × 360 × 440				1,200 × 360 × 440			
Compressor (Hermetic DC swing type)	Equivalent to 0.4 kW				Equivalent to 0.75 kW				Equivalent to 1.1 kW			
Evaporator	Open coil type											
Condenser	Double tube type											
Fan Motor (50/60 Hz) W	14/13.5 (for cooling heat dissipation fins)											
Agitator Motor	3ϕ, 60 W, 4 P											
Temperature adjust (Selectable) Synchronization type Standard	Room temperature or machine temperature*3 (Set to "Room temperature: Mode 4" by default)											
Synchronization type Object to be controlled	Tank fluid temperature											
Synchronization range K	–9.9 to +9.9 against the reference temperature (Set at 0.0 by default)											
Fixed type Object to be controlled	Tank fluid temperature											
Fixed type Range °C	5 to 50											
Fluid temperature controller resolution	±0.1°C											
Capacity control range	0 to 100%											
Timer function	ON timer: 1 to 999 hours (1-hour unit setting)											
Refrigerant control	Rotation speed control of compressor by inverter + Opening rate control of electric expansion valve											
Refrigerant: R410A (GWP:2090)*4 Filling amount kg	0.46				0.63				0.81			
Refrigerant: R410A (GWP:2090)*4 CO_2 equivalent tCO2eq	0.97				1.32				1.70			
Protection devices/ protective functions	Agitator inner thermostat, discharge pipe temperature thermistor, condenser temperature thermistor, reversed-phase protection device, restart prevention timer, high liquid temperature protection thermistor, low liquid temperature protection thermistor, refrigerant leakage detection, set of inverter protection devices, molded-case circuit breaker (–B only), high-pressure switch, compressor thermal protector (–C type only), overheat protection temperature switch (–H type only), thermal fuse (–H type only)											
Operating range: Room temperature °C	5 to 45 (tank fluid temperature ±10°C)											
Operating range: Tank fluid temperature °C	5 to 50											
Operating range: Primary side cooling water temperature °C	5 to 40 (tank fluid temperature ±10°C)											
Operating range: Primary side cooling water volume L/min	Primary side cooling water temperature 5 to within 35°C: 6 to 20 35 to 40°C: 12 to 20				Primary side cooling water temperature 5 to within 35°C: 7.5 to 40 35 to 40°C: 18 to 40				Primary side cooling water temperature 5 to within 35°C: 13 to 60 35 to 40°C: 30 to 60			
Operating range: Oil viscosity mm^2/s	0.5 to 200											
Operating range: Humidity	20 to 85% RH											
Internal Pressure Loss	0.1 MPa (12 L/min)				0.1 MPa (18 L/min)				0.1 MPa (30 L/min)			
Acceptable fluid	Water-soluble cutting and grinding fluids, cutting and grinding oils, lubricating oil, hydraulic oil (mineral oil based), industrial water (except for chemicals, food products and fuel)											
Operating sound level (value equivalent to measurement in an anechoic chamber) (Front 1 m, height 1 m) db (A)	60											
Permissible transport vibration*5	Up and down vibration 14.7 m/s^2 (1.5 G) × 2.5 hr (7.5 to 100 Hz sweep/five min.)											
Protective structure*6	IP2X											
Mass kg		45		47		52		54		61		63
Molded-case circuit breaker (Rated current) A	–	10	–		–	10	–		–	10	–	
Items prepared by the customer: Earth leakage breaker (Rated current)*7 A	10											
Items prepared by the customer: Device other than earth leakage breaker	Tank, supply pump, float switch, return filter, suction strainer											

Note: *1. The cooling capacity indicates the value at the standard point (tank fluid temperature: 35ºC, primary side cooling water temperature: 35ºC, rated primary side cooling water volume: see page 16, oil used: ISO VG32, 1 atm). This unit has about ±5% of product tolerance.
*2. Use a commercial power supply for the power source. The use of an inverter power supply may cause burn damage to the machine. The voltage fluctuation range should be within ±10%. If it is more than ±10%, please consult us.
*3. The optional thermistor for machine temperature synchronization is required.
*4. The refrigerant is enclosed in a sealed container. The –C type comes with the SDS (Safety Data Sheet) for refrigerant R410A.
*5. The specifications for permissible transport vibration are those of a standard unit.
*6. Electric component section ingress protection: IP54 or equivalent (However, use piping conduits etc. rated at least IP54 at wiring ports.)
*7. The earth leakage breaker is not supplied with this product. Please prepare it yourself.

Specifications (AKJ569W/909W)

Oil cooling unit horsepower (HP)	2.0				3.0			
Model name	AKJ569W				AKJ909W			
	Standard	–B	–C	–H	Standard	–B	–C	–H
Cooling capacity (50/60 Hz)*1 kW	5.0/5.6				8.0/9.0			
Heater kW		–		2		–		4
Supply power*2	Three phase AC 200/200·220 V 50/60 Hz				Three phase AC 200/200·220 V 50/60 Hz			
Circuit voltage: Main circuit								
Circuit voltage: Operating circuit	DC12/24 V							
Max. power consumption / Max. current consumption: When cooling, 200 V 50 Hz	2.25 kW/7.7 A				4.13 kW/13.5 A			
When cooling, 200 V 60 Hz	2.25 kW/7.4 A				4.14 kW/13.3 A			
When cooling, 220 V 60 Hz	2.24 kW/6.9 A				4.13 kW/12.1 A			
When heating, 200 V 50 Hz		–		2.32 kW/7.1 A		–		4.42 kW/13.1 A
When heating, 200 V 60 Hz		–		2.33 kW/7.1 A		–		4.45 kW/13.1 A
When heating, 220 V 60 Hz		–		2.79 kW/7.8 A		–		5.33 kW/14.4 A
Exterior color	Ivory white							
External dimensions (H × W × D) mm	1,440 × 470 × 500				1,615 × 560 × 620			
Compressor (Hermetic DC swing type)	Equivalent to 1.5 kW				Equivalent to 2.2 kW			
Evaporator	Open coil type							
Condenser	Double tube type							
Fan Motor (50/60 Hz) W	20/19 (for cooling heat dissipation fins)							
Agitator Motor	3ϕ, 60 W, 4 P							
Temperature adjust (Selectable) Synchronization type Standard	Room temperature or machine temperature*3 (Set to "Room temperature: Mode 4" by default)							
Synchronization type: Object to be controlled	Tank fluid temperature							
Synchronization type: Synchronization range K	–9.9 to +9.9 against the reference temperature (Set at 0.0 by default)							
Fixed type: Object to be controlled	Tank fluid temperature							
Fixed type: Range °C	5 to 50							
Fluid temperature controller resolution	±0.1°C							
Capacity control range	0 to 100%							
Timer function	ON timer: 1 to 999 hours (1-hour unit setting)							
Refrigerant control	Rotation speed control of compressor by inverter + Opening rate control of electric expansion valve							
Refrigerant: R410A (GWP:2090)*4 Filling amount kg	0.78				1.07			
Refrigerant: R410A (GWP:2090)*4 CO_2 equivalent tCO2eq	1.64				2.24			
Protection devices/ protective functions	Agitator inner thermostat, discharge pipe temperature thermistor, condenser temperature thermistor, reversed-phase protection device, restart prevention timer, high liquid temperature protection thermistor, low liquid temperature protection thermistor, refrigerant leakage detection, set of inverter protection devices, molded-case circuit breaker (–B only), high-pressure switch, compressor thermal protector (–C type only), overheat protection temperature switch (–H type only), thermal fuse (–H type only)							
Operating range: Room temperature °C	5 to 45 (tank fluid temperature ±10°C)							
Operating range: Tank fluid temperature °C	5 to 50							
Operating range: Primary side cooling water temperature °C	5 to 40 (tank fluid temperature ±10°C)							
Operating range: Primary side cooling water volume L/min	Primary side cooling water temperature 5 to within 35°C: 13 to 60 35 to 40°C : 30 to 60				Primary side cooling water temperature 5 to within 35°C: 19 to 60 35 to 40°C: 42 to 60			
Operating range: Oil viscosity mm²/s	0.5 to 200							
Operating range: Humidity	20 to 85% RH							
Internal Pressure Loss	0.1 MPa (42 L/min)							
Acceptable fluid	Water-soluble cutting and grinding fluids, cutting and grinding oils, lubricating oil, hydraulic oil (mineral oil based), industrial water (except for chemicals, food products and fuel)							
Operating sound level (value equivalent to measurement in an anechoic chamber) (Front 1 m, height 1 m) db (A)	55				64			
Permissible transport vibration*5	Up and down vibration 14.7 m/s² (1.5 G) × 2.5 hr (7.5 to 100 Hz sweep/five min.)							
Protective structure*6	IP2X							
Mass kg		86		89		107		111
Molded-case circuit breaker (Rated current) A	–	15		–	–	20		–
Items prepared by the customer: Earth leakage breaker (Rated current)*7 A	15				20			
Items prepared by the customer: Device other than earth leakage breaker	Tank, supply pump, float switch, return filter, suction strainer							

Refer to Page 17 for explanatory notes.

Operating Temperature Range

Note: 1. The mark "◎" shows the standard point.
2. Be sure to use the unit within the range of use specified in ▭.
(Use outside the usable range significantly reduces cooling capacity. There is also a risk of moisture condensation.)

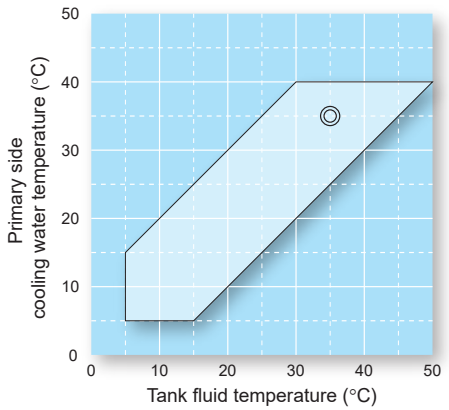

External Dimension Diagram (AKJ189W/359W)

AKJ189W (-B, -C, -H)

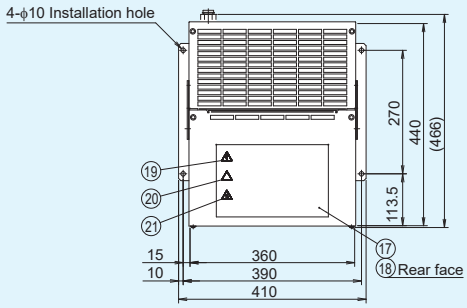

Part No.	Name	Description
1	Primary side cooling water inlet	Rc1/2 Plastic plug fitted
2	Primary side cooling water outlet	Rc1/2 Plastic plug fitted
3	Condenser drain port	Rc3/8 Plugged
4	Condenser drain pan port	Rc1/4 Plugged
5	Control panel	
6	Electrical component box cover	
7	Power supply inlet (right/left)	ϕ28 Hole
8	Signal line inlet (right/left)	ϕ22 Hole
9	Eye plate	ϕ25 Hole
10	Room temperature thermistor	
11	Fluid temperature thermistor	
12	Cooling coil	

Part No.	Name	Description
13	Agitating plate	
14	Machine nameplate	
15	Instruction nameplate	
16	Design nameplate	
17	Overall caution nameplate	
18	Electric wiring diagram nameplate	
19	Battery charge mark nameplate	
20	Cutting injury caution plate	
21	High temperature caution plate	
22	Model nameplate	
23	Heater	Only for models with heater

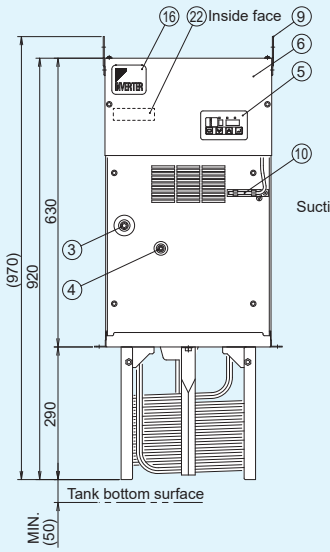

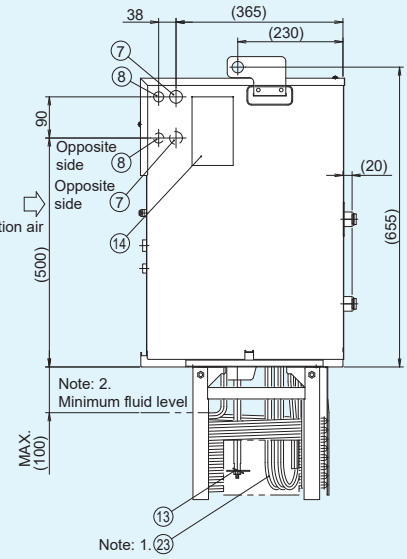

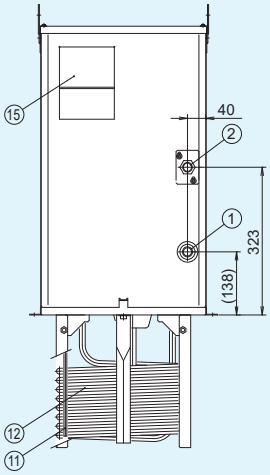

AKJ359W (-B, -C, -H)

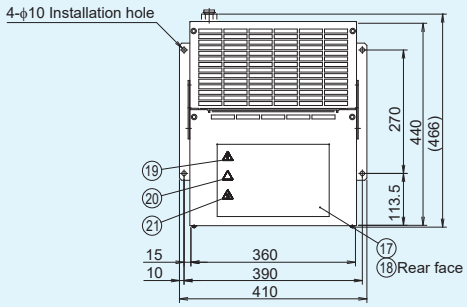

Part No.	Name	Description
1	Primary side cooling water inlet	Rc1/2 Plastic plug fitted
2	Primary side cooling water outlet	Rc1/2 Plastic plug fitted
3	Condenser drain port	Rc3/8 Plugged
4	Condenser drain pan port	Rc1/4 Plugged
5	Control panel	
6	Electrical component box cover	
7	Power supply inlet (right/left)	ϕ28 Hole
8	Signal line inlet (right/left)	ϕ22 Hole
9	Eye plate	ϕ25 Hole
10	Room temperature thermistor	
11	Fluid temperature thermistor	
12	Cooling coil	

Part No.	Name	Description
13	Agitating plate	
14	Machine nameplate	
15	Instruction nameplate	
16	Design nameplate	
17	Overall caution nameplate	
18	Electric wiring diagram nameplate	
19	Battery charge mark nameplate	
20	Cutting injury caution plate	
21	High temperature caution plate	
22	Model nameplate	
23	Heater	Only for models with heater

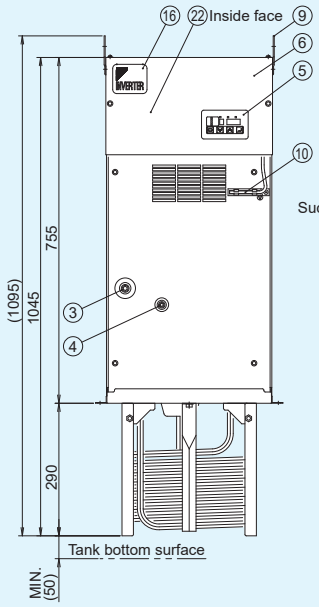

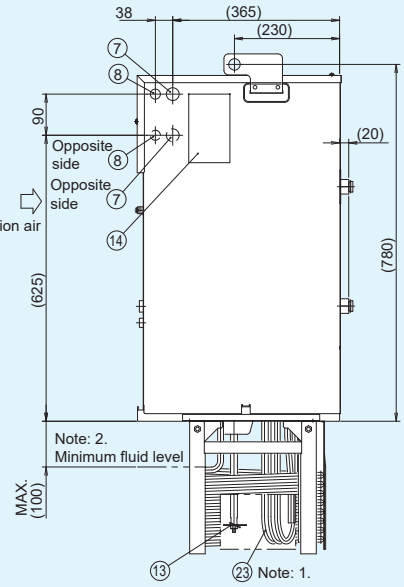

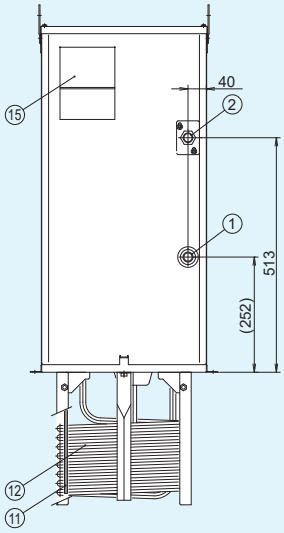

Note: 1. The heater is provided on the –H type only.
Note: 2. Make sure that the liquid level range in the tank does not fall below the specified level (indicated in this figure).

External Dimension Diagram (AKJ459W)

AKJ459W (-B, -C, -H)

Part No.	Name	Description
1	Primary side cooling water inlet	Rc1/2 Plastic plug fitted
2	Primary side cooling water outlet	Rc1/2 Plastic plug fitted
3	Condenser drain port	Rc3/8 Plugged
4	Condenser drain pan port	Rc1/4 Plugged
5	Control panel	
6	Electrical component box cover	
7	Power supply inlet (right/left)	ϕ28 Hole
8	Signal line inlet (right/left)	ϕ22 Hole
9	Eye plate	ϕ25 Hole
10	Room temperature thermistor	
11	Fluid temperature thermistor	
12	Cooling coil	

Part No.	Name	Description
13	Agitating plate	
14	Machine nameplate	
15	Instruction nameplate	
16	Design nameplate	
17	Overall caution nameplate	
18	Electric wiring diagram nameplate	
19	Battery charge mark nameplate	
20	Cutting injury caution plate	
21	High temperature caution plate	
22	Model nameplate	
23	Heater	Only for models with heater

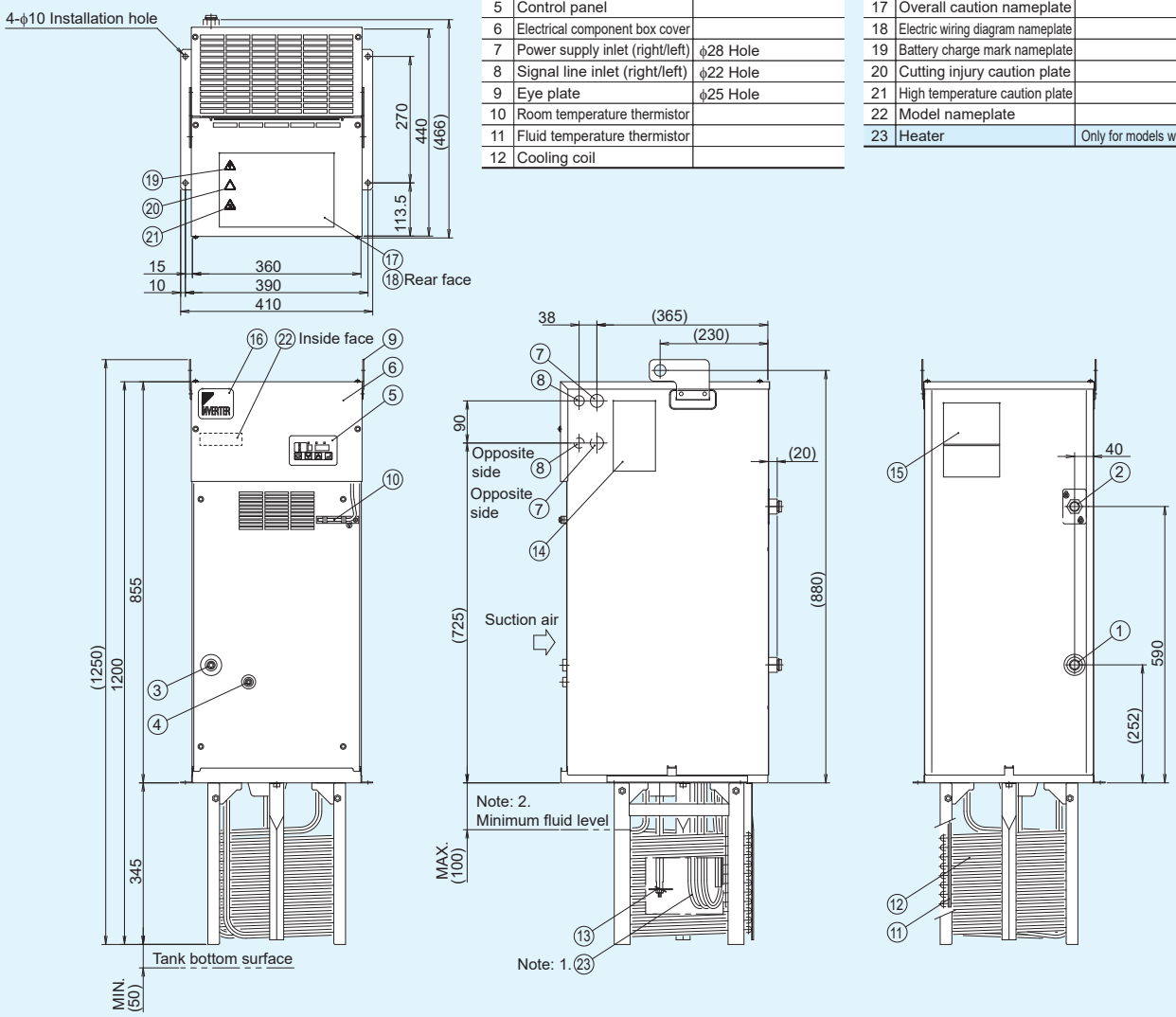

Note: 1. The heater is provided on the –H type only.
Note: 2. Make sure that the liquid level range in the tank does not fall below the specified level (indicated in this figure).

External Dimension Diagram (AKJ569W)

AKJ569W (-B, -C, -H)

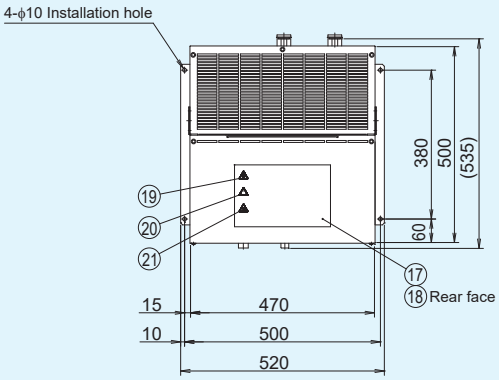

Part No.	Name	Description
1	Primary side cooling water inlet	Rc3/4 Plastic plug fitted
2	Primary side cooling water outlet	Rc3/4 Plastic plug fitted
3	Condenser drain port	Rc3/8 Plugged
4	Condenser drain pan port	Rc1/4 Plugged
5	Control panel	
6	Electrical component box cover	
7	Power supply inlet (right/left)	ϕ28 Hole
8	Signal line inlet (right/left)	ϕ22 Hole
9	Eye plate	ϕ25 Hole
10	Room temperature thermistor	
11	Fluid temperature thermistor	
12	Cooling coil	

Part No.	Name	Description
13	Agitating plate	
14	Machine nameplate	
15	Instruction nameplate	
16	Design nameplate	
17	Overall caution nameplate	
18	Electric wiring diagram nameplate	
19	Battery charge mark nameplate	
20	Cutting injury caution plate	
21	High temperature caution plate	
22	Model nameplate	
23	Heater	Only for models with heater

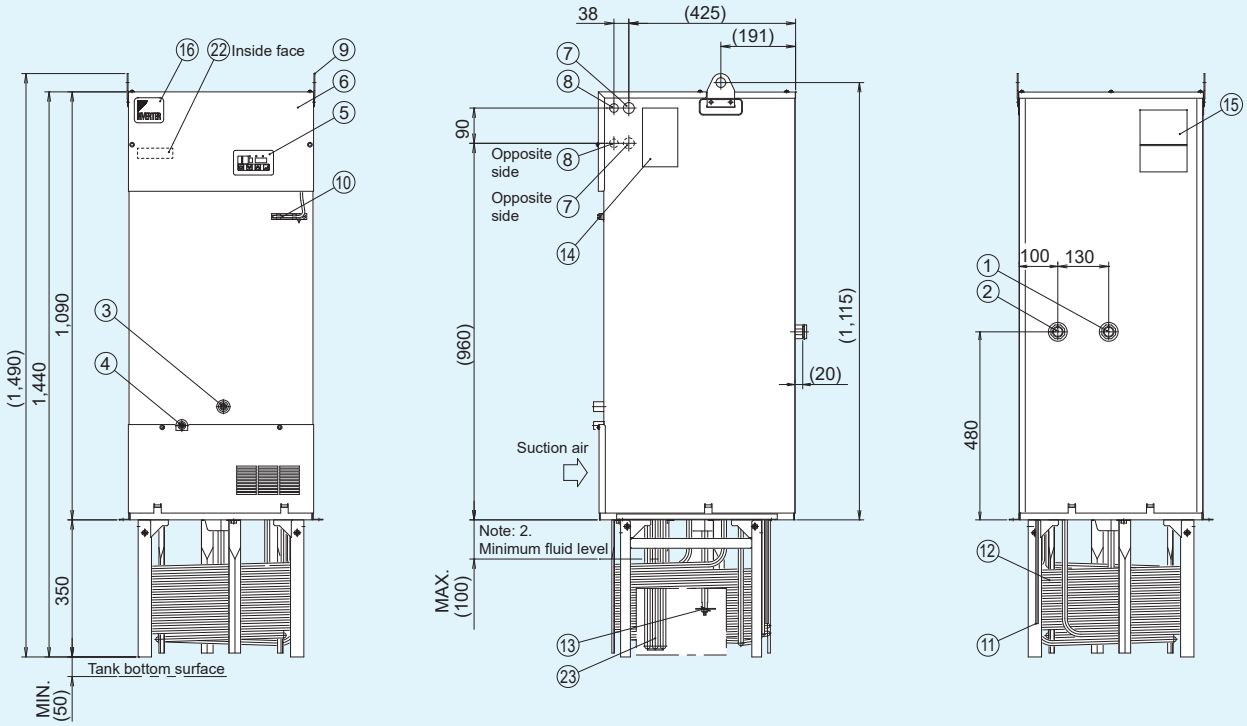

Note: 1. The heater is provided on the –H type only.
Note: 2. Make sure that the liquid level range in the tank does not fall below the specified level (indicated in this figure).

External Dimension Diagram (AKJ909W)

AKJ909W (-B, -C, -H)

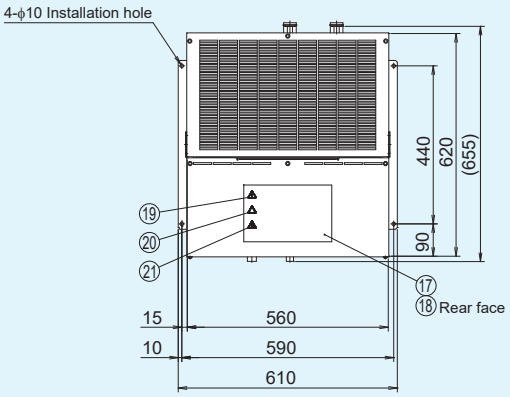

Part No.	Name	Description
1	Primary side cooling water inlet	Rc3/4 Plastic plug fitted
2	Primary side cooling water outlet	Rc3/4 Plastic plug fitted
3	Condenser drain port	Rc3/8 Plugged
4	Condenser drain pan port	Rc1/4 Plugged
5	Control panel	
6	Electrical component box cover	
7	Power supply inlet (right/left)	ϕ28 Hole
8	Signal line inlet (right/left)	ϕ22 Hole
9	Eye plate	ϕ25 Hole
10	Room temperature thermistor	
11	Fluid temperature thermistor	
12	Cooling coil	

Part No.	Name	Description
13	Agitating plate	
14	Machine nameplate	
15	Instruction nameplate	
16	Design nameplate	
17	Overall caution nameplate	
18	Electric wiring diagram nameplate	
19	Battery charge mark nameplate	
20	Cutting injury caution plate	
21	High temperature caution plate	
22	Model nameplate	
23	Heater	Only for models with heater

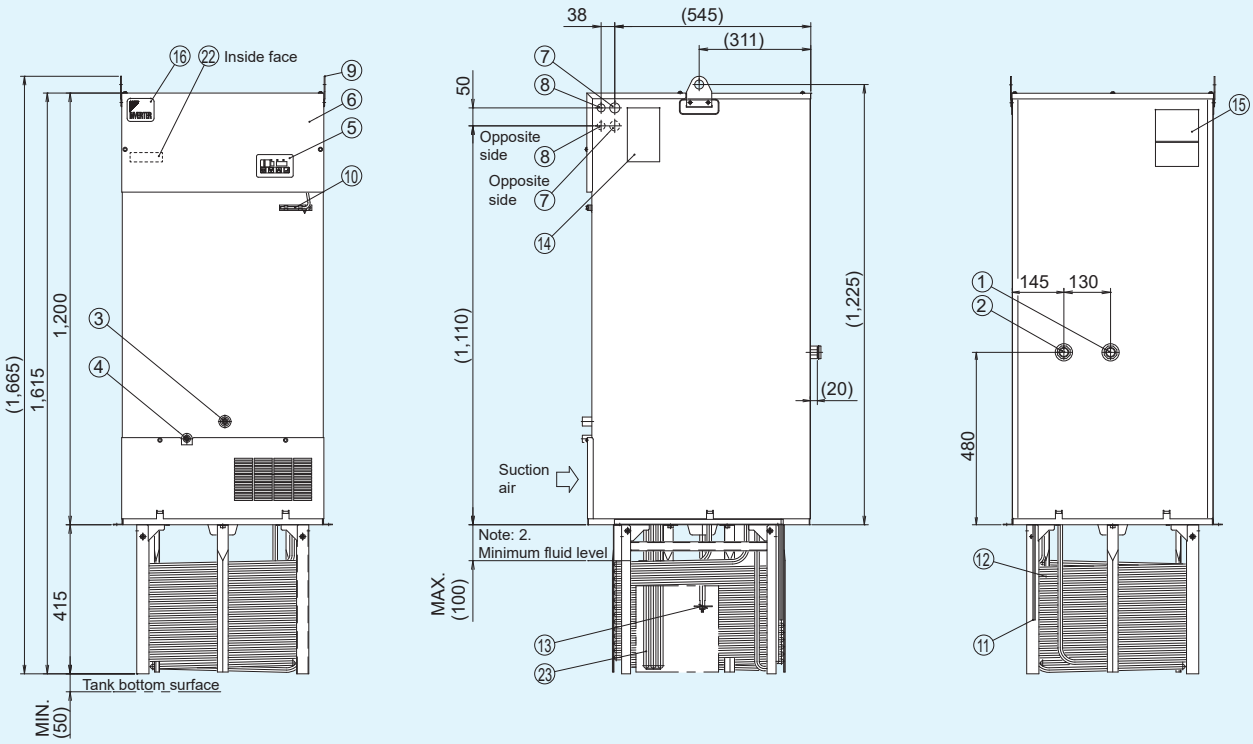

Note: 1. The heater is provided on the –H type only.
Note: 2. Make sure that the liquid level range in the tank does not fall below the specified level (indicated in this figure).

Thermistor (Compatible with all types of Oil Cooling Unit 9 series)

■ Thermistor models and applications

When this optional part is installed in the oil piping of the machine, the thermistor detects the oil or water temperature for the unit's operation.

Name	Model	Length of lead wire L (m)	Figure	Application (To be installed by yourself)	Applicable Oil Cooling Unit model
Thermistor for machine body synchronization	AKZ 9-OP-K5	5 m	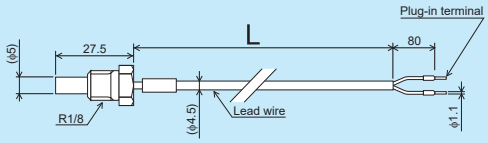	For machine temperature synchronization control (implanted in the machine body)	AKC9 (W) Series AKJ9 (W) Series
	AKZ 9-OP-K10	10 m			
	AKZ 9-OP-K15	15 m			
	AKZ 9-OP-A5	5 m	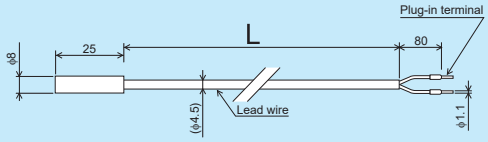	For machine temperature synchronization control (attached to the surface of the machine body)	
	AKZ 9-OP-A10	10 m			
Thermistor for oil temperature control	AKZ9-OP-Y5	5 m	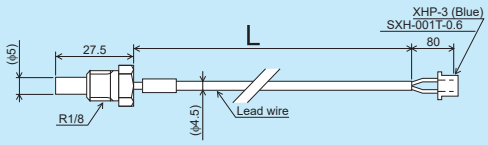	For return oil temperature control (Installed in the oil pipe or water pipe of the machine)	AKC9 (W) Series
	AKZ9-OP-Y10	10 m			

Thermistor characteristics: Resistance value ··· R25 (Resistance value at 25°C) = 20 kΩ, Tolerance: ±3% (Temperature conversion value: equivalent to ±0.4°C)

■ Instruction for installation and connection

For AKZ 9-OP-K

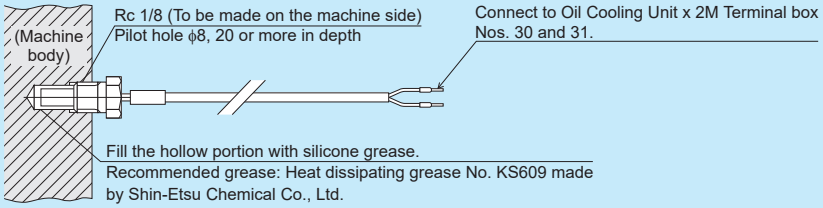

For AKZ 9-OP-A

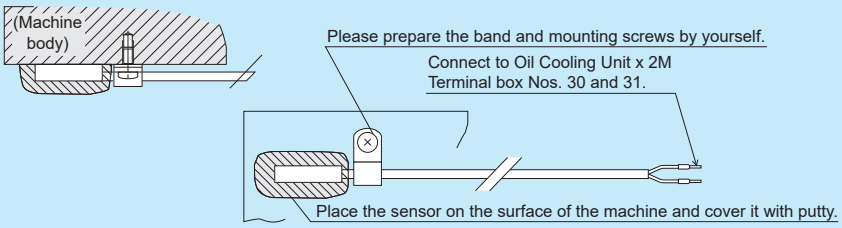

For AKZ 9-OP-Y

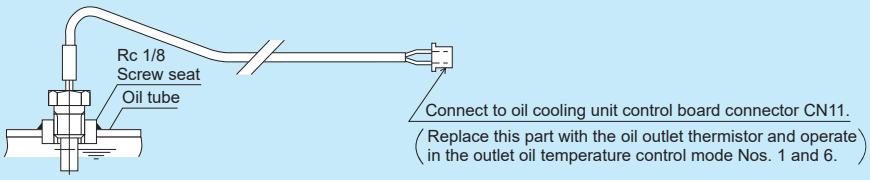

■ Installation positions of the thermistor for machine synchronization and thermistor for oil temperature control

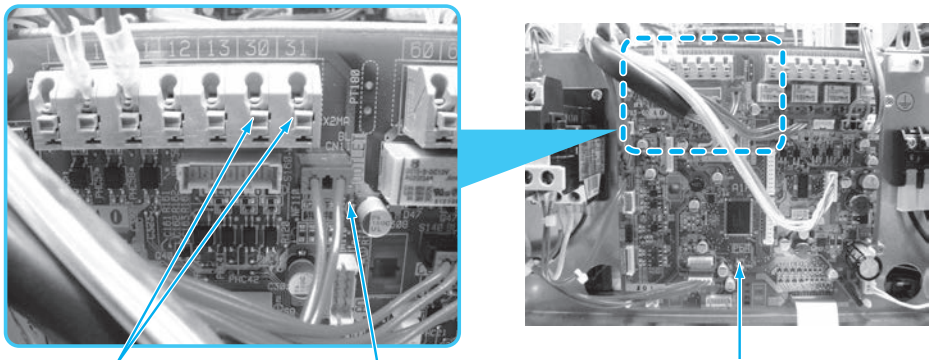

Thermistor for machine synchronization Installation position (No. 30/31 pin)

Thermistor for oil temperature control Installation position (CN11)

Control board

Option Board for Communication

The following can be achieved by mounting this option board on the Oil Cooling Unit's control board and communicating with the machine.

1. **Changing the operation mode and the operation setting from the machine**
2. **Reading various data such as the alarm code and temperature-related data (machine temperature, room temperature, inlet oil temperature, outlet oil temperature, inlet and outlet differential temperature, inverter frequency) of the Oil Cooling Unit from the machine**

Communication method	Model	Installation position	Applicable model
Serial communication	AKZ9-OP-CS	Inside control box	AKZ149W, AKZ329W, AKZ439W, AKZ569W, AKZ909W AKJ189W, AKJ359W, AKJ459W, AKJ569W, AKJ909W
Parallel communication	AKZ9-OP-CP	Inside control box	AKZ149W, AKZ329W, AKZ439W, AKZ569W, AKZ909W AKJ569W, AKJ909W

Note: For details on the communication procedure and specifications, refer to the dedicated instruction manual

■ Communication board installation position: For AKZ9 (W) Series

Serial communication

Parallel communication

AKZ149W/AKZ329W/AKZ439W

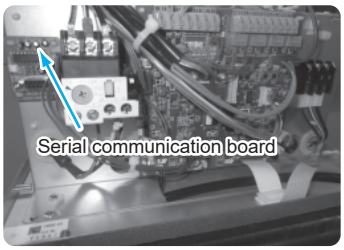

Note: One or the other only

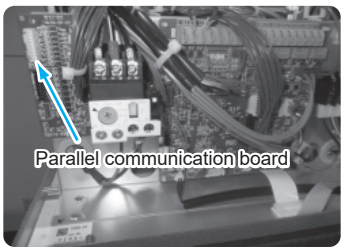

AKZ569W

Serial communication board

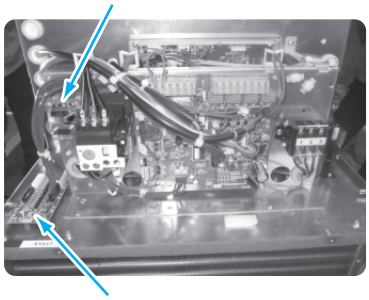

Parallel communication board

AKZ909W

Serial communication board

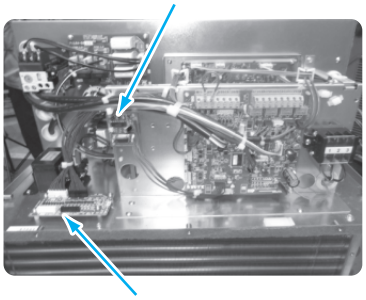

Parallel communication board

■ Communication board installation position : For AKJ9 (W) Series)

Serial communication

Parallel communication

AKJ189W/AKJ359W/AKJ459W

Serial communication board

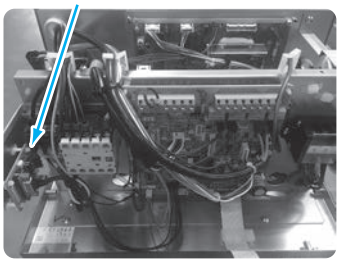

*Only serial communications board to be installed on AKJ189W to 459W.

–

AKJ569W

Serial communication board

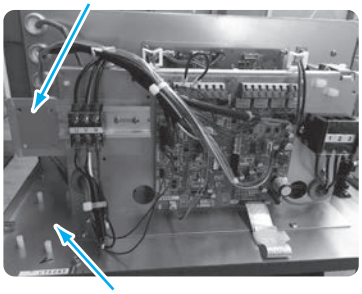

Parallel communication board

AKJ909W

Serial communication board

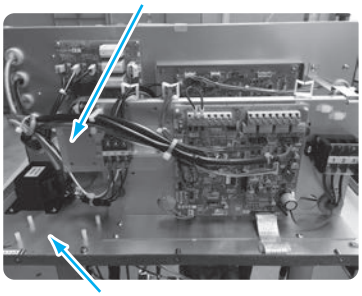

Parallel communication board

Part Names, Functions and Operation of Control Panel

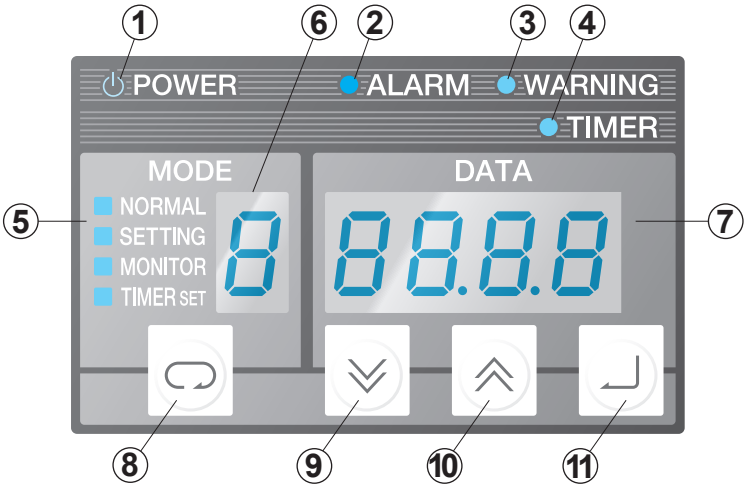

NO.	Item	Description
①	Power light (Green)	The light is turned on while power is supplied.
②	Error warning light (Red)	When an error occurs: Level 1 alarm: The light keeps blinking. Level 2 alarm: The light is continuously on.
③	Warning light (Green)	When a warning occurs: Level 1 warning: The light keeps blinking. Level 2 warning: The light is continuously on.
④	Timer mode light (Green)	The light keeps blinking while the machine is at a stop in the timer mode.
⑤	Operation mode display	Displays the mode of the control panel. NORMAL: Normal mode; SETTING: Operation setting mode; MONITOR: Monitor mode; TIMER SET: Timer setting mode
⑥	Operation mode/ Data No. display	Displays the current operation mode (Normal mode/Operation setting mode) or data number of the data currently displayed on the data display.
⑦	Data display	Displays various data. The data displayed differs depending on the operation mode and data number.
⑧	[SELECT] (Select) key	Selects the operation mode.
⑨	[DOWN] key	Decrements the value of the operation mode, data number or data by 1. When held for two seconds or longer, decrements the values by 10.
⑩	[UP] key	Increments the value of the operation mode, data number or data by 1. When held for two seconds or longer, increments the values by 10.
⑪	[ENTER] (Determine) key	Determines the operation mode, data number, and data to be changed.

■ Operation for changing to each mode

A mode can be changed by operating the key in general.

To enter a special mode, hold down a number of keys in combination for more than five seconds.

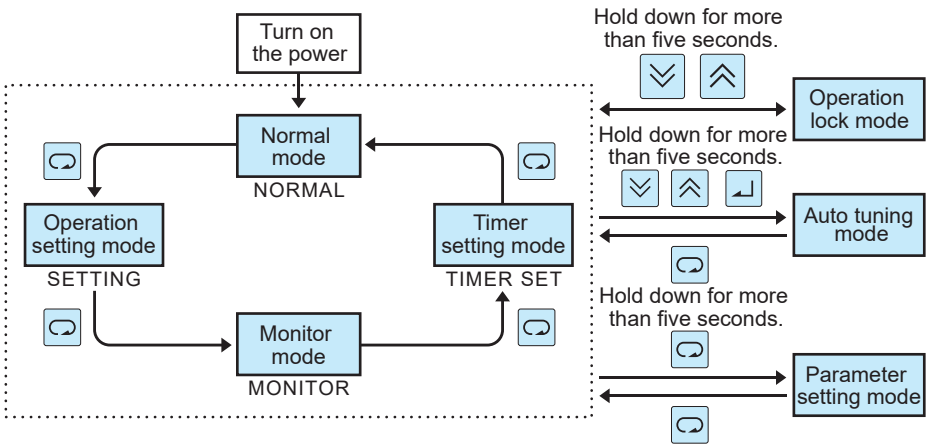

CAUTION

■ The default setting is "Operation lock mode".
To start operation, perform the unlocking operation as shown above.

■ The default setting for operation on the standard machine is:
Operation mode: 4 (AKZ9W Series: Inlet oil temperature control, room temperature synchronization control; AKJ9W Series: Tank fluid temperature control, room temperature synchronization control)
Differential temperature: 0.0 (K)

Operation Mode and Setting Method

Watch a video on the relationship between control and accuracy!
URL https://www.daikinpmc.com/mv/oilcon_accuracy.html

AKZ9W Series

Operation mode No.	Mode name	Description	Setting temperature range	Necessary optional part
Operation mode 0	Inlet oil temperature, fixed temperature control	Keep the inlet oil temperature at the setting temperature within the range specified in the right column.	5 to 50°C	
Operation mode 1	Outlet oil temperature or return oil temperature control, fixed temperature control	Keep the outlet oil temperature or return oil temperature at the setting temperature within the range specified in the right column.	5 to 50°C	Oil temperature control thermistor (When return oil temperature is controlled)
Operation mode 4	Inlet oil temperature, room temperature synchronization control	Keep the inlet oil temperature at the setting temperature within the range specified in the right column.	Between Room temperature –9.9°C and Room temperature +9.9°C	
	Inlet oil temperature, machine temperature synchronization control	Keep the inlet oil temperature at the setting temperature within the range specified in the right column.	Between Machine temperature –9.9°C and Machine temperature +9.9°C	Machine synchronization thermistor
Operation mode 6	Outlet oil temperature or return oil temperature control, room temperature synchronization control	Keep the outlet oil temperature or return oil temperature at the setting temperature within the range specified in the right column.	Between Room temperature –9.9°C and Room temperature +9.9°C	Oil temperature control thermistor (When return oil temperature is controlled)
	Outlet oil temperature or return oil temperature control, machine temperature synchronization control	Keep the outlet oil temperature or return oil temperature at the setting temperature within the range specified in the right column.	Between Machine temperature –9.9°C and Machine temperature +9.9°C	Oil temperature control thermistor (When return oil temperature is controlled) Machine synchronization thermistor

AKJ 9W Series

Operation mode No.	Mode name	Description	Setting temperature range	Necessary optional part
Operation mode 0	Tank fluid temperature, fixed temperature control	Maintains the tank fluid at a fixed temperature	5 to 50°C	
Operation mode 4	Tank fluid temperature, room temperature synchronization control	Synchronizes the tank fluid temperature with the room temperature	Room temperature –9.9 to +9.9 (K)	
	Tank fluid temperature/machine temperature synchronization control	Synchronizes the tank fluid temperature with the machine temperature	Machine temperature –9.9 to +9.9 (K)	Machine synchronization thermistor

Note: Refer to Page 23 for details of required optional parts.

■ Setting procedure

Default setting: Set to operation mode 4, and a temperature of "0.0"
When you use your machine at a setting other than the default setting, change the setting following the procedure shown below.

1 Power ON ···· Release the operation lock mode before starting operation for the first time. (Hold down the ⌄ and ⌃ keys together for at least 5 seconds.)

2 Select the "SETTING" operation setting mode. (Press the ↺ key once)

Changing the operation mode

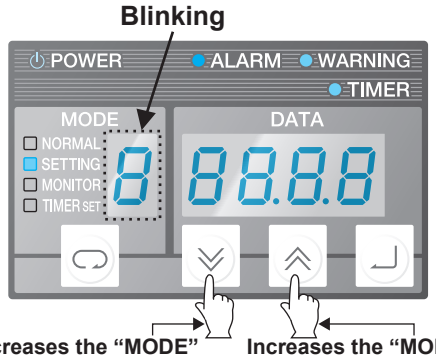

Decreases the "MODE" number by 1 **Increases the "MODE" number by 1**

3 Set the operation mode by pressing the ⌄ or ⌃ key.

4 Confirm by pressing ↵.

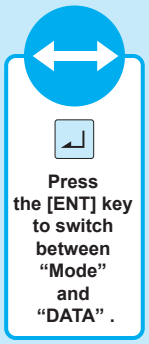

Change the setting temperature

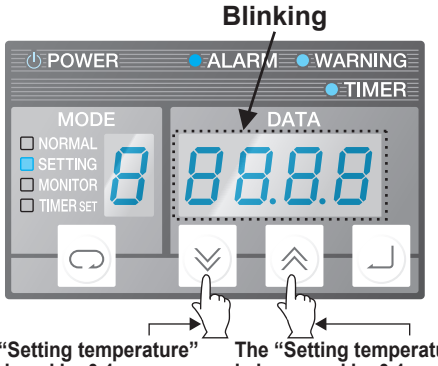

The "Setting temperature" is reduced by 0.1 **The "Setting temperature" is increased by 0.1.**

5 Set the temperature by pressing the ⌄ or ⌃ key.

6 Confirm by pressing ↵.

7 To return to the "NORMAL" mode, press the ↺ key three times.

Points Checked in the Monitor Mode

The following points can be checked in the monitor mode.

Monitor No.	Description AKZ9W	Description AKJ9W	Note
0	Room temperature or machine body temperature [Th1]		∗1
1	Outlet oil temperature or return oil temperature [Th2]	–	∗1
2	Primary side cooling water temperature [Th3]		∗1
3	Inlet oil temperature [Th4]	Tank fluid temperature	∗1
4	Reserved [Th5]	Intake gas temperature [Th5]	∗1

Monitor No.	Description AKZ9W	Description AKJ9W	Note
5	△T (Th4 to Th2)	–	∗1
6	Cooling capacity control command value (%)		–
7	Compressor inverter rotational speed (rps)		–
8	Power consumption∗3	Power consumption∗4	–
9	Extended DIN (hundreds digit), DOUT (tens digit) status		∗2

∗1. If the thermistor is not connected or has a broken wire, –99.9 is displayed.
∗2. With the default setting, 0 is displayed. Note that display is enabled when parameter n020 is "1" or the optional communication extension board is installed.
∗3. This is the value obtained by rough calculation under the following conditions (the error is around 20%): power supply voltage of 200 V, pump discharge pressure of 0.2 MPa (VG32: oil temperature 25°C).
∗4. This is the roughly calculated value with a power supply voltage of 200 V (the error is approximately 20%). Contact us separately about pumpless units in the AKZ Series.

Electric Wiring Diagram (representative model of AKZ9W Series)

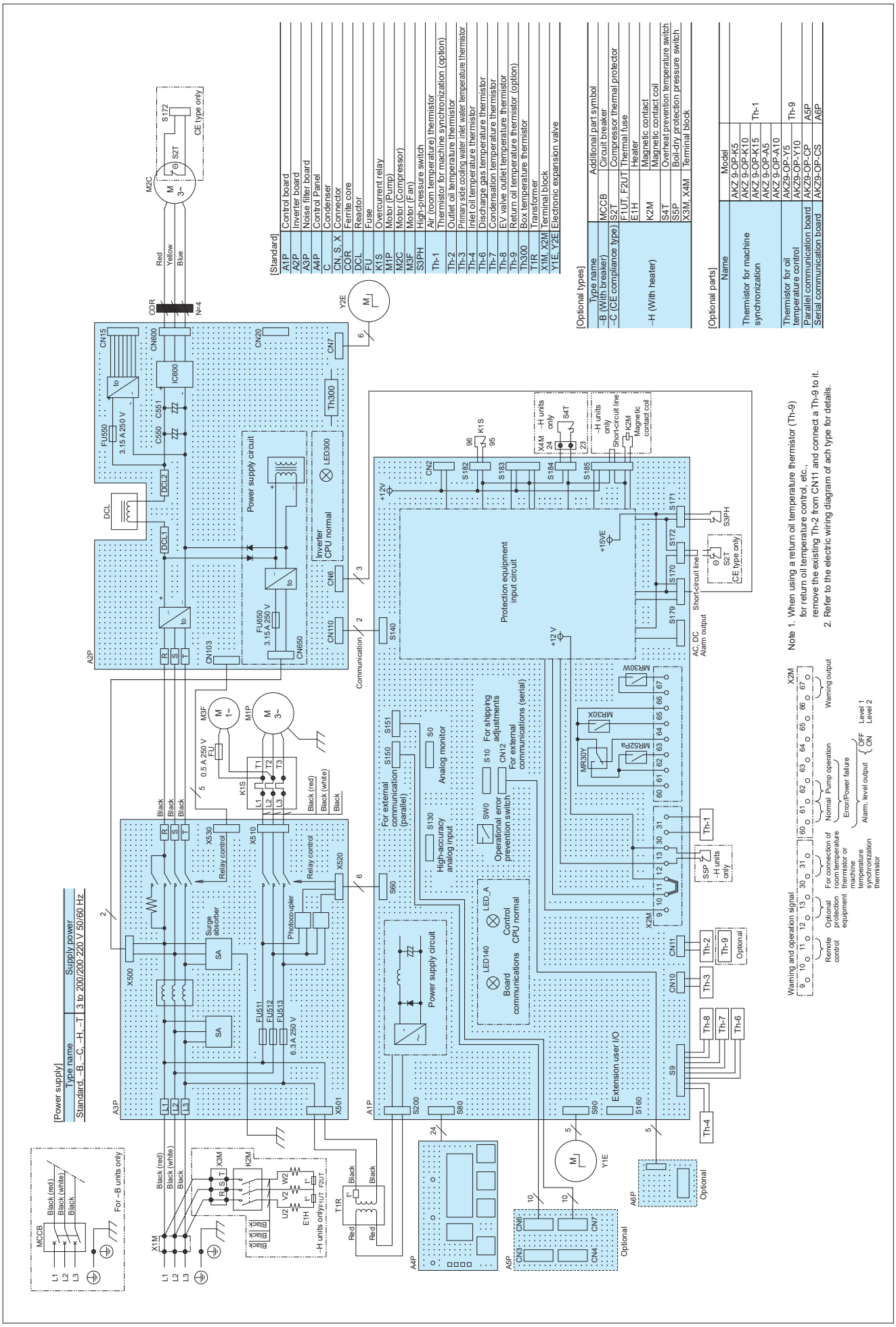

Electric Wiring Diagram (representative model of AKJ9W Series)

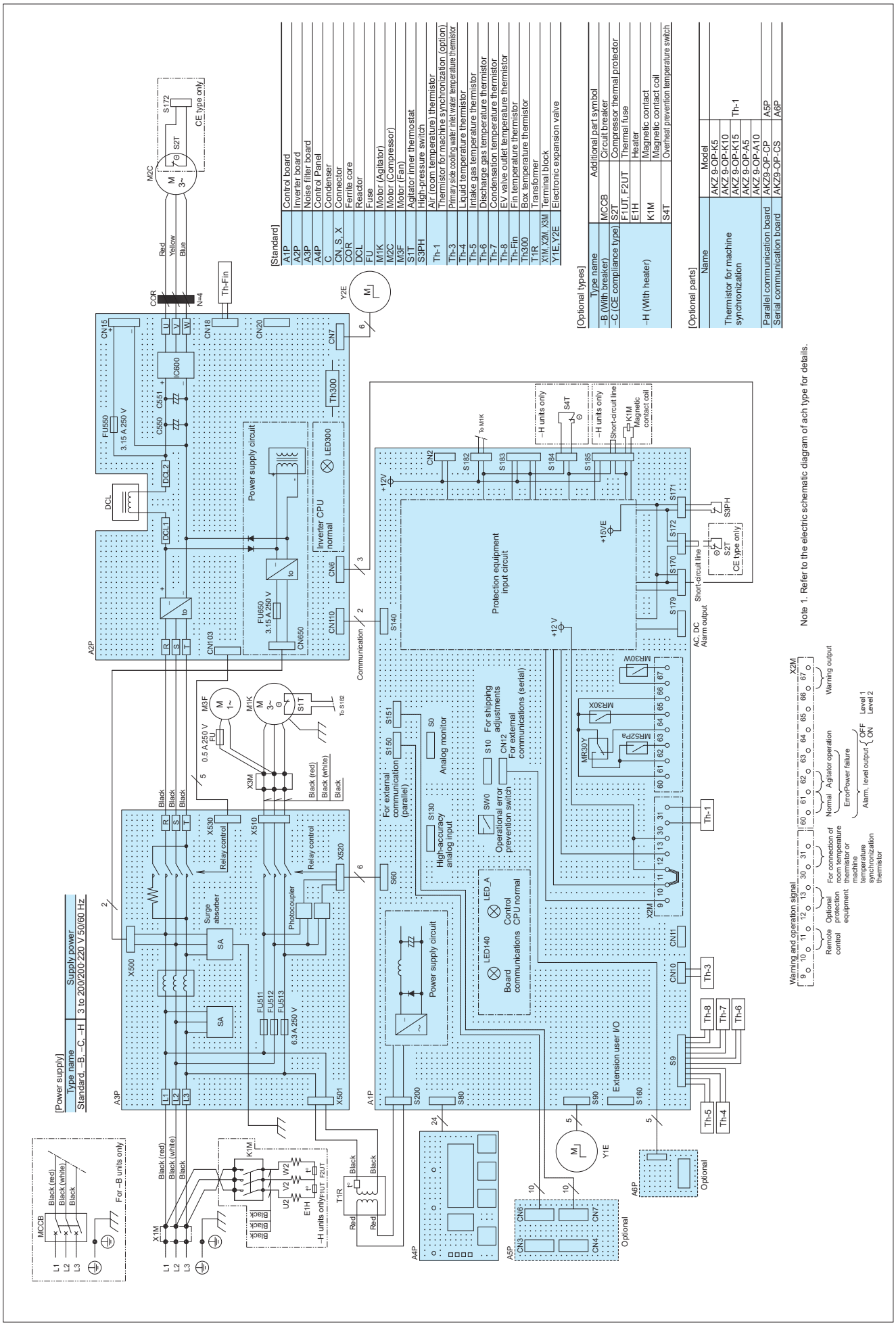

Electric Wiring Connection Instruction

1 Power supply capacity····Refer to the maximum power consumption/maximum current consumption panel of the specification table (AKZ9W: Pages 3 and 4, AKJ9W: Pages 17 and 18).

2 Connection to power supply terminal block (X1M, Tr)

(1) With the standard and optional (–C, –H, –T) types:
- Connect to X 1 M.

(2) With the "with breaker" (–B) specifications:
- Connect to the breaker.

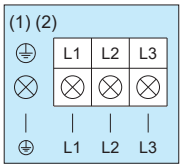

1. Screw terminal and wiring diameter

Series	Terminal block	Screw terminal	Wiring diameter		
			JIS cable	IEC cable	UL cable
AKZ 149W, 329W, 439W, 569W AKJ 189W, 359W, 459W, 569W	X1M	M4	2.0 mm² or greater	2.5 mm² or greater	AWG#14 or greater
	Breaker	M5			
AKZ 909W AKJ 909W	X1M	M5	3.5 mm² or greater	4.0 mm² or greater	AWG#12 or greater
	Breaker	M5			

2. Use a round crimp-style terminal for connection.
3. The terminal block is for three poles and the earth wire is to be secured on the enclosure with a screw.

3 Connection to signal terminal block (X2M)

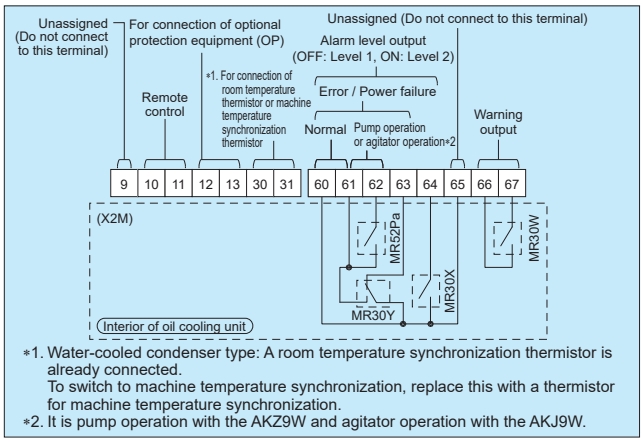

*1. Water-cooled condenser type: A room temperature synchronization thermistor is already connected.
To switch to machine temperature synchronization, replace this with a thermistor for machine temperature synchronization.
*2. It is pump operation with the AKZ9W and agitator operation with the AKJ9W.

1. Straight crimp terminal and wiring diameter

Straight pin terminals	Wiring diameter		
	JIS cable	IEC cable	UL cable
*	0.25 mm² to 1.25 mm²	0.3 mm² to 1.5 mm²	AWG#22 to #16

2. Use a straight crimp-style terminal for connection.
3. Use stranded wires for electric connection.
4. The wiring size is 0.5 mm² to 1.5 mm² in the case of duplex cable according to IEC. If using stripped wire, make the stripped length 9 mm to 10 mm.

*Recommended models and manufacturers: TGN TC-1.25-9T (NICHIFU Co., Ltd.)

DANGER

1. Always install an all-pole (3-pole) circuit breaker* (to be prepared by you) of the specified capacity on the main power supply.
   *All contact distances must be at least 3 mm.
2. Always ground the machine. Since a noise filter is installed, there is a risk of electrical shock without proper grounding.
3. Before opening the electric component box, always turn off the power, and wait for 5 minutes until internal high voltage has been discharged.
4. Do not energize the equipment with the electric component box kept open.

CAUTION

1. To avoid the effects of noise, connect the power wire by cutting it to the proper length so that no excess wire comes into contact with the control board or elsewhere.
2. To perform remote control, remove the short-circuit wire between [10] and [11] and install an operation switch (to be prepared by you).
3. The mode is set to "Lock mode (Stop mode)" by default. Before starting operation, follow the procedure to release the Lock mode from the operation panel. Refer to the operation manual for the unlocking procedure.
4. The unit is provided with a misoperation prevention switch (PROTECT) to reject setting from the operation panel. If you want to use this function, make the necessary setting referring to the operation manual.

4 Signal output time chart

(1) Alarm/operation status output chart

Signal output \ Operation status			Remote operation (between [10] and [11])							
			ON				OFF			
			Normal	Level 1 error or LOCK	Level 2 error	Power failure (Power OFF)	Normal	Level 1 error or LOCK	Level 2 error	Power failure (Power OFF)
Normal ("a" contact)	60–61	ON								
		OFF								
Error/Stop (Power OFF) ("b" contact)	60–63	ON								
		OFF								
Error level ("a" contact)	60–64	ON								
		OFF								
Pump operation ("a" contact)	61–62	ON								
		OFF								

(2) Warning output chart

Signal output \ Operation status			Non-warning status				Warning status			
			Normal	Level 1 error or LOCK	Level 2 error	Power failure (Power OFF)	Normal	Level 1 error or LOCK	Level 2 error	Power failure (Power OFF)
Warning output ("a" contact")	66–67	ON								
		OFF								

CAUTION

1. The following electric wires can be used on the terminal block for straight crimp-style terminals.
   Single wire: ϕ0.57 to ϕ1.44 (AWG#22 to #16)
   Stranded wire: 0.25 mm² to 1.25 mm² (AWG#22 to 16)
2. Load applicable to [60 - 64] and [66 - 67] is as follows:
   Min. applicable load: DC 10 mV, 10 μA or more
   Max. applicable load: DC 30 V, 2 A (Resistance load)
3. For [10] to [13], please prepare contacts to meet the condition of minimum applicable load DC 12 V and 5 mA.
4. When the length of the thermistor to be connected to [30] - [31] is longer than 10 m, or the wiring is routed in a poor noise environment, use shielded wire.

Notes for Installing Piping Outside the Machine

If the external pressure loss (site piping resistance) exceeds the specified use range, phenomena such as abnormal noise of the pump (relief noise, noise of cavitation), decrease of cooling capacity and control failure of oil temperature may occur.

1. Suction-side piping
   Keep the suction vacuum pressure within the range between −30.7 and 0 kPa. The use of a suction filter of 100 to 150 mesh is recommended.
2. Discharge-side piping
   Keep the pressure loss of the discharge-side piping at 0.5 Mpa or less.
3. Do not install a stop valve on the suction or discharge side. When a stop valve must be installed on the discharge side out of necessity, use a 0.5 Mpa relief valve along with the stop valve.
4. Calculation of piping resistance
   Determine the oil piping size by calculating the piping resistance according to the following equation:

   Piping resistance $\Delta P = 0.595 \times \nu \times Q \times L/D^4$
   (For use of general hydraulic oil and lubricant)

   ΔP: Piping resistance (MPa)
   ν: Dynamic coefficient of viscosity (mm^2/s)
   Refer to the Viscosity/Temperature Chart.
   Q: Flow rate (L/min)
   L: Piping length (m)
   D: Internal piping diameter (mm)

● Relationship between oil flow rate and external pressure loss

An AKZ9W Series Oil Cooling Unit incorporating a pump of the circulating type has the characteristics shown below. When the external pressure loss (Δp) is 0.5 MPa or less, the rated flow rate (Q0) is achieved, but when the external pressure loss exceeds 0.5 MPa, the flow rate becomes lower than the rated flow rate.

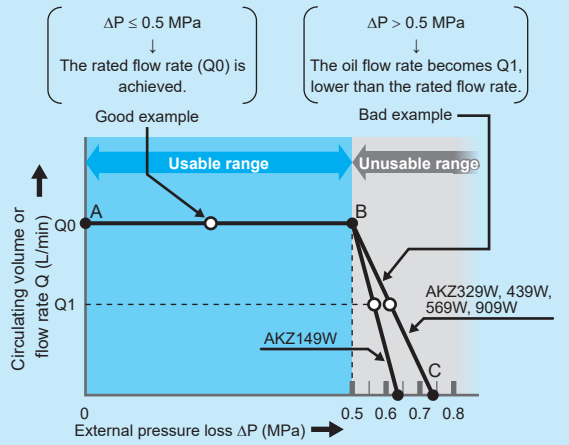

Q (L/min): Flow rate (Q0 : Rated flow rate)
ΔP (MPa): External pressure loss
A: Status when the external pressure loss is "0"
B: Status when the external pressure loss is "0.5 Mpa" (Cracking pressure of relief valve)
C: Status when the external pressure loss is large and the oil flow rate is "0".

Note: Design the site piping to withstand a pressure of at least 1.0 MPa.

■Viscosity/Temperature Chart

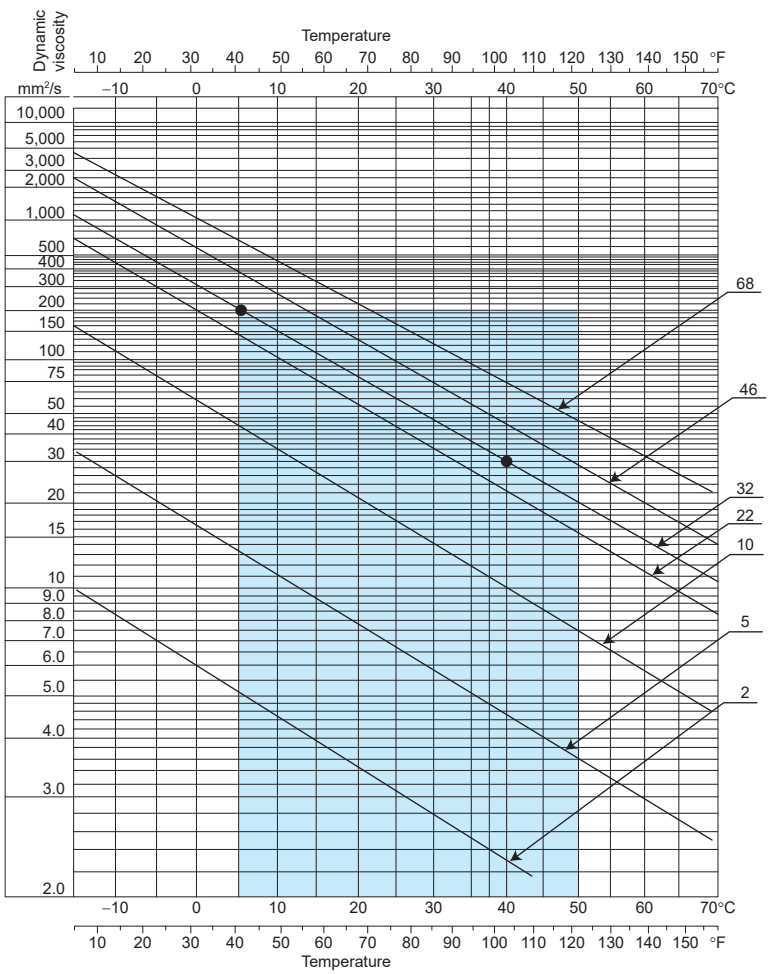

Example of viscosity
(dynamic coefficient of viscosity)
In winter: 195 mm^2/s
(ISO VG32 Oil temperature 5°C)
In summer: 29 mm^2/s
(ISO VG32 Oil temperature 40°C)

Notes for Handling

●Important notes to be observed regarding the machine side (machine tools and industrial machinery)

1. When rough transport conditions are expected while transporting the machine overseas or elsewhere, special precautions should be taken in the packaging and transportation method so as to avoid the application of excessive force on the oil cooling unit.
2. The Oil Cooling Unit (this unit) does not incorporate a flow switch for checking the oil supply or a temperature switch for abnormal temperature (high temperature or low temperature) of oil supplied. So, please provide protection devices such as a flow switch and temperature switch at the machine.

Notes for operation and cooling capacity

1. Do not use an Oil Cooling Unit for cooling a liquid at 50°C or more. Start to operate the Oil Cooling Unit at the same time as the machine or before the liquid temperature rises to 40°C.
2. Do not place an object that hinders ventilation within 500 mm of the air-intake or exhaust.
3. The condenser should be cleaned periodically, about once a year. Please refer to the operation manual for the cleaning method.
4. If cutting chips and powder-like chips deposit on and adhere to the cooling coil (evaporator) in the AKJ9W Series, the cooling capacity should be diminished and it could cause failure. To avoid the adherence of deposits on the cooling coil, install an efficient return filter on the return side (fluid inlet) of the tank and periodically clean inside the tank.

Notes on usable fluids with oil cooling units

1. The fluid usable with the oil cooling unit is listed in the table below for each series.
2. Do not use fluid listed below as “×”

	Description	AKZ9W Series	AKJ 9W Series
Lubricating oil **Mineral hydraulic oil**	• Oil that is classified as third class petroleum or fourth class petroleum of the fourth group hazardous materials stipulated in the Fire Defense Law and that corresponds to discoloration No. 1 in the copper corrosion test method (JIS K2513) of petroleum products	✓	✓
Nonflammable hydraulic oil ●Phosphate ester hydraulic fluid ●Chlorinated hydrocarbon series ●Water - Glycol series ●W/O·O/W emulsion series (High-aqueous hydraulic oil)	——	×	×
Coolant fluid ●Water-soluble cutting and grinding fluid ●Non water-soluble cutting and grinding oil	——	×	✓
Ethylene glycol (Antifreeze liquid)	Fluid not including any ingredient that corrodes the SUS304 material used for the evaporator coil	×	✓
Water (Industrial water)		×	✓
Inflammable fluid like fuel	Liquid equivalent to special flammables, alcohol, first class petroleum and second class petroleum of the fourth group hazardous materials specified according to the Fire Defense Law	×	×
Chemicals	——	×	×
Liquid for food products	Drinking water, water for cooling food products, etc.	×	×

***Before operating this unit, be sure to read the operation manual and properly understand it.**

• Instructions for safe operation

Signs and Instructions	
	⚠DANGER ····· Failure to observe the instruction may cause an imminent hazardous situation that may result in personal death or serious injury.
	⚠WARNING ···· Failure to observe the instruction may result in personal death or serious injury.
	⚠CAUTION ····· Failure to observe the instruction may result in personal injury or damage to the property.

① General instructions

[⚠DANGER] ① Use the equipment only in accordance with the intended specifications (specified in brochure, specification sheet, operation manual, and caution plates).
[⚠DANGER] ② Never operate the equipment in an explosive atmosphere.
[⚠DANGER] ③ Do not disassemble, repair or modify the equipment by yourself.
[⚠DANGER] ④ Always comply with the laws and regulations for safety (Industrial Safety and Health Law, Fire Defense Law, and JIS B 8361 Guidelines of Hydraulic System).
[⚠WARNING] ⑤ Caution in the event of refrigerant leak
- Ventilate the room adequately (to avoid the risk of suffocation).
- Avoid direct contact of the refrigerant with skin (to avoid the risk of cryogenic burns).
- In the event of inhalation of a great deal of refrigerant, contact with skin, or refrigerant in the eye, seek medical attention immediately.

[⚠WARNING] ⑥ In the event of an abnormal condition, stop operation promptly, investigate the cause of the problem and take appropriate remedial measures.
[⚠CAUTION] ⑦ Do not use the unit in atypical environments (locations subject to high temperatures, high humidity, or a lot of dust, contamination, particulate matter, steam, oil mist or corrosive gases: H_2S, SO_2, NO_2 or CL_2).
[⚠CAUTION] ⑧ Install a flow switch and temperature switch on the machine to protect the spindle and other components.
[⚠CAUTION] ⑨ Do not get on the equipment or place an object on the equipment.
[⚠CAUTION] ⑩ Use the unit at an altitude of up to 2,000 m. At altitudes in excess of 1,000 m, the life of electrical components may be shortened due to the reduced air pressure.

② Instructions for transportation

[⚠DANGER] ① When hoisting the equipment, check its weight and use the eye plates and hangers on it properly.
[⚠DANGER] ② When hoisting the equipment, do not do so while it is fitted with a tank or anything else that you have provided.
[⚠WARNING] ③ Do not approach the equipment while it is being hoisted and moved.
[⚠ CAUTION] ④ When moving the equipment, take appropriate measures for fall prevention.
[⚠ CAUTION] ⑤ Do not tilt the equipment 30 degrees or more while transporting it (including during storage).

③ Instructions for installation

[⚠WARNING] ① Install the equipment on a rigid, level foundation and secure it appropriately.
[⚠CAUTION] ② Do not place an object near the suction port or discharge port of the equipment.

④ Instructions for wiring and piping installation

[⚠DANGER] ① Wiring and piping installation should be performed by a person with specialized knowledge and skills.
[⚠DANGER] ② Always use a commercial power supply for the power source. (The use of an inverter power supply may cause burn damage).
[⚠DANGER] ③ Connect the wiring for power supply in accordance with the electric wiring instruction diagram of the specification sheet and operation manual.
[⚠DANGER] ④ Ground the equipment properly.
[⚠WARNING] ⑤ Install the wiring in accordance with the standard by checking the electric wiring diagram.
[⚠CAUTION] ⑥ Always install a dedicated all-pole (3-pole) circuit breaker appropriate for the capacity of Oil Cooling Unit on the main power supply on site.
[⚠CAUTION] ⑦ Check that the oil piping has a pressure resistance of at least 1 MPa (and is usable at negative pressures too at the suction side) and install it reliably.
[⚠CAUTION] ⑧ Check to see that the primary side cooling water piping has a pressure resistance of 1 MPa or more and install the piping appropriately.

⑤ Instructions for trial run

[⚠CAUTION] ① Check to see that the machine is in a safe status (not activated) before starting the trial run.
[⚠CAUTION] ② Check to see that the oil piping and electric wiring are correctly connected to the machine and that there is no looseness in connections and joints.
[⚠CAUTION] ③ Disable the operation lock of the equipment (Oil Cooling Unit) before starting the machine.
[⚠CAUTION] ④ Check to see that the required amount of oil is in the oil piping system and that the piping is not blocked partway along.
[⚠CAUTION] ⑤ Check that the tank contains the correct volume of the fluid used. (For AKJ)

⑥ Instructions during operation

[⚠DANGER] ① Do not splash water or liquid on the equipment.
[⚠WARNING] ② Do not push your finger or an object into gaps of the equipment.
[⚠CAUTION] ③ Do not touch the heated exhaust port of the equipment.

⑦ Instructions for maintenance and inspection

[⚠DANGER] ① Perform maintenance and inspection with the equipment kept open. Working in a closed status may result in suffocation due to the leak of refrigerant.
[⚠DANGER] ② Always turn off the main power supply before starting maintenance and inspection.
[⚠DANGER] ③ Wait for five minutes after turning off the main power supply before starting maintenance and inspection operation.
[⚠DANGER] ④ Do not operate the equipment with its cover opened.
[⚠CAUTION] ⑤ Wear protective gear such as gloves and an eye protector when performing maintenance, inspection and cleaning.
[⚠CAUTION] ⑥ Keep oil cleanliness to NAS 10 level or lower according to the pollution level.
[⚠CAUTION] ⑦ Check the oil level in the tank and ensure that it is between the yellow line and the red line.
[⚠CAUTION] ⑧ Inspect the underneath (drain pan) of the oil cooling unit once every six months, and if oil has accumulated, discharge it through the oil drainage port.
[⚠CAUTION] ⑨ Clean the oil cooler periodically to ensure that there is no accumulation/adhesion of chips, etc. (For AKJ)
[⚠CAUTION] ⑩ Use water that satisfies the standard given on page 2.

Selection Method for Oil Cooling Units

Unit conversion formula ●1 kW = 860 kcal/h

1. Select an oil cooling unit with a cooling capacity **20 to 30% larger** than the amount of heat generated from the machine tool.
2. Since the cooling capacity of an oil cooling unit varies with changes in fluid temperature (fluid inlet temperature) and room temperature, the fluid temperature and room temperature conditions must be clarified in order to select the appropriate oil cooling unit.
3. Three methods are described here (calculation examples (1), (2) and (3)) as a guide to estimating the amount of heat generated from the machine tool. Ultimately, tests have to be conducted to determine the exact amount of heat generation for selecting the appropriate oil cooling unit.

For cooling the spindle of a machining center (AKZ)

Example calculation 1 **Estimating the amount of heat generation from the temperature difference between the inlet and outlet for oil going to the machine**

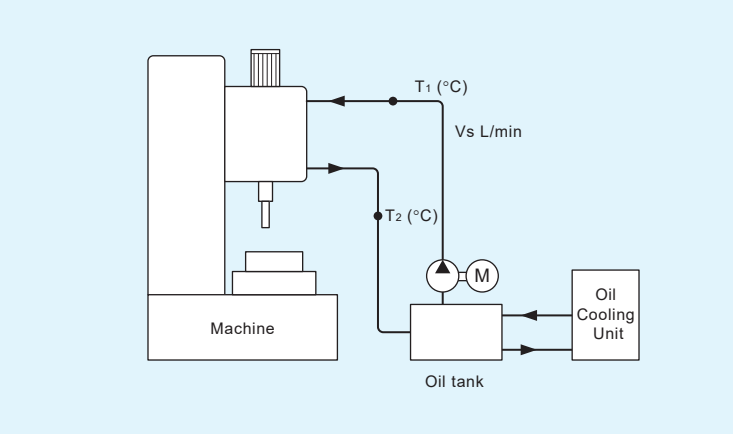

$$Q = \frac{Vs \times \rho \times Cp \times \Delta T}{1000 \times 60}$$

Q : Amount of heat generation (kW)
Vs : Flow rate (L/min)
ρ : Density (kg/m³)
Cp : Specific heat (kJ/kg•°C)
ΔT : Temperature difference (°C)

Example calculation

When "Vs" is 30 L/min and "ΔT" is 5°C

$$Q = \frac{30\ \text{L/min} \times 876\ \text{kg/m}^3 \times 1.97\ \text{kJ/kg°C} \times 5\text{°C}}{1000 \times 60}$$

$\approx$ **4.31 kW**

Example calculation 2 **When the motor output loss is considered to be the amount of heat generation**

$$Q = H \cdot \frac{\eta}{100}$$

Q : Amount of heat generation (kW)
H : Motor output (kW)··· For driving the spindle
η : Motor output loss (%)

Example calculation **When the output loss is 30% with a motor output of 7.5 kW**
→ The output loss is 30% or so in general (Cooling of spindle head)

Q = 7.5 × 0.3 = 2.3 (kW)

For cooling cutting/grinding fluid (AKJ)

1. Since the tank capacity and pump flow rate are generally large the heat load from the cutting and grinding fluid system shou ld be roughly estimated according to the following formula. After rough estimation, the heat load should be determined by conducting tests on the actual machine to select the oil cooling unit.
2. Select a model with a cooling capacity **20 to 30% larger** than the amount of heat generation from the machine tool.

Example calculation 3 General guide for heat generation

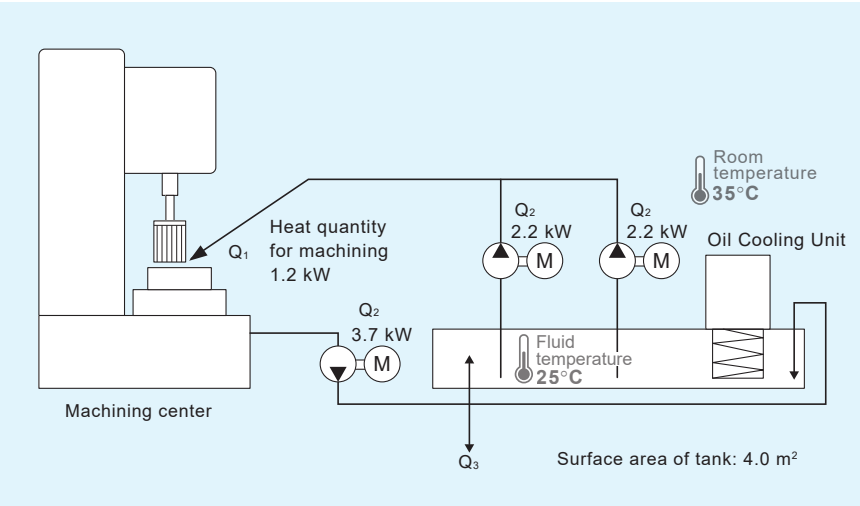

$$Q = Q_1 + Q_2 + Q_3$$

Q : Heat load of the entire machine tool system

Q_1 : Amount of heat generated during machining on a machine tool

Q_2 : Amount of heat generation of the pump motor for coolant pump (Amount of heat transferred to coolant)

: Q_2 = Pump motor output (kW) × $\frac{\eta}{100}$

Q_3 : Heat balance between coolant and room temperature via coolant tank

$Q_3 = K \cdot A \cdot \Delta T$

K : Heat transfer coefficient (W/m²•°C), K = 11.6 to 23.2 in general

A : Surface area of tank in contact with fluid (m²)

ΔT : Room temperature-Controlled liquid temperature in tank (°C)

Example calculation

When Q_1 = 1.2 kW

$Q_2 = (2.2 + 2.2 + 3.7) \times \frac{50}{100} \approx 4.1$ kW

(For a coolant pump, "η" is generally 50%.)

$Q_3 = 20 \times 4 \times (35 - 25) / 1000 = 0.8$ kW

$\therefore Q = Q_1 + Q_2 + Q_3$

= 1.2 + 4.1 + 0.8

= 6.1 kW

When it is desired to reduce the temperature of the fluid in the tank within a fixed time (AKZ, AKJ)

Example calculation 4

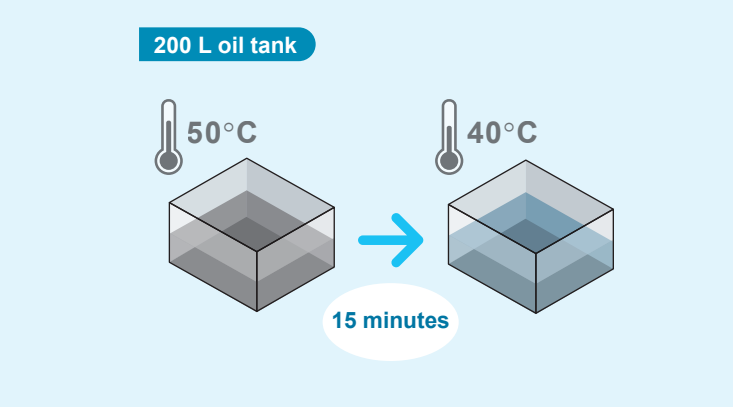

$$Q = \frac{V \times \rho \times Cp \times \Delta T}{1000 \times 60 \times t}$$

Q : Amount of heat generation (kW)

V : Tank fluid capacity (L)

ρ : Density (kg/m³)

Cp : Specific heat (kJ/kg•°C)

ΔT : Temperature difference (°C)

t : Time (min)

Example calculation

When it is desired to cool 200 L of hydraulic oil from 50°C to 40°C within 15 minutes

$$Q = \frac{200\ L \times 876\ kg/m^3 \times 1.97\ kJ/kg°C \times (50 - 40)°C}{1000 \times 60 \times 15\ min}$$

A cooling capacity of **approx. 3.83 kW** or greater is required.

Note: Depending on the tank and piping surface area and ambient temperature, heat absorption and heat dissipation may increase. If the effect of heat absorption and heat dissipation is large, select a model with this effect taken into account.

Physical property values

Name of substance	Specific heat kJ/(kg°C)	Density (kg/m³)
Water	4.18	998
Lubricating oil/hydraulic oil	1.97	876
Water-soluble coolant (10x dilution with water)	3.94 to 4.10	991
Aluminum	0.900	2710
Iron	0.460	7870
Copper	0.385	8960

* The numbers in the table are reference values, so please use them as a guide.
* All property values (some being calculated values) are at 20°C.

WATER-COOLED CONDENSER TYPE

OIL COOLING UNIT

[Official] Introducing a Video Site

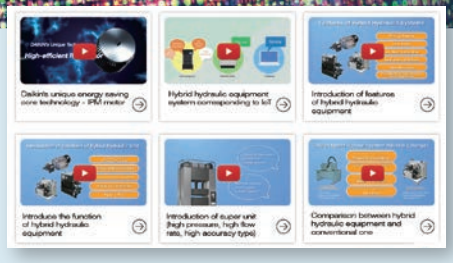

We have opened a site where you can watch videos on the latest models of the DAIKIN Oil Hydraulics Division, including SUPER UNIT, ECORICH, and oil cooling units, all in one place.

Everything from the energy-saving technology supporting hybrid products to the features and functions of each model is explained in an easy-to-understand manner.

By registering the page in the favorites on your computer or cell phone, you can have the latest information at your fingertips any time.

The site is also ready for smartphones and tablets!

URL https://www.hyd.daikin.com/mv

Daikin Hydraulic Search

Overseas Service Network

Please contact DAIKIN Sales Counter for servicing of Oil Cooling Unit in countries outside Japan.

Daikin is ready to offer you service in conjunction with the sales agents of our Air-conditioning and Hydraulic Divisions located in worldwide countries and regions.

Country/Region	State/City	Company name
East Asia	Shanghai	◎凯灵液压科技（上海）有限公司 KAILING HYDRAULICS TECHNOLOGY (Shanghai) CO.,LTD.
		大金空調技術（上海）有限公司 DAIKIN AIR CONDITIONING TECHNOLOGY (Shanghai) CO.,LTD.
	Beijing	大金空調技術（北京）有限公司 DAIKIN AIR CONDITIONING TECHNOLOGY (Beijing) CO.,LTD.
	Guangzhou	大金空調技術（広州）有限公司 DAIKIN AIR CONDITIONING TECHNOLOGY (Guangzhou) CO.,LTD.
	Seoul	◎KD HYDRAULICS,LTD.
	Taipei	HO TAI SERVICE & MARKETING CO.,LTD.
Singapore	Singapore	◎ZICOM PRIVATE LTD.
Thailand	Bangkok	◎Nandee Inter-Trade Co., Ltd.
Indonesia	Djakarta	◎PT. ETERNA KARYA SEJAHTERA
Vietnam	Hanoi	◎AN PHAT EQUIPMENT & ACCESSORIES CO., LTD.
Germany	Neu-Ulm	◎Sauer Bibus GmbH
U.S.	Illinois	◎ALL WORLD MACHINERY SUPPLY INC.
Mexico	Querétaro	◎ALL WORLD MACHINERY SUPPLY INC. Mexico Branch

◎: Sales desks for hydraulic equipment. The others are companies related to air conditioning.

(As of September, 2023.)

●Contents in this catalog are subject to change for improvement without prior notice.

GK267A(2023.09.000)XX.MD.MD